Innovative Climate Solutions

Split-type heat pump

ECOs HEAT ONYX

Installation and Operation Manual for ECOs HEAT ONYX Split-Type Indoor Unit

As a result of continuous product development, the manufacturer reserves the right to make changes to the products and technical documentation for the equipment.

For your own comfort, please familiarize yourself with this manual and follow the steps described in it. It is advisable to keep this manual for future reference.

Note: All the illustrations in this manual are for explanation purpose only. Your air conditioner may be slightly different. The actual shape shall prevail. They are subject to change without notice for future improvement.

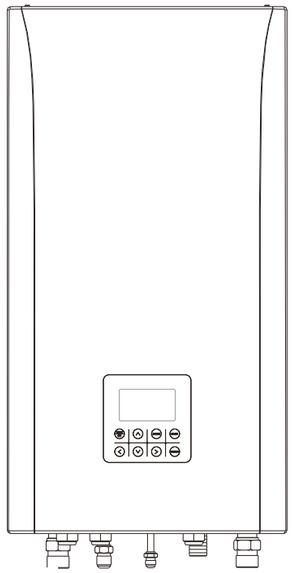

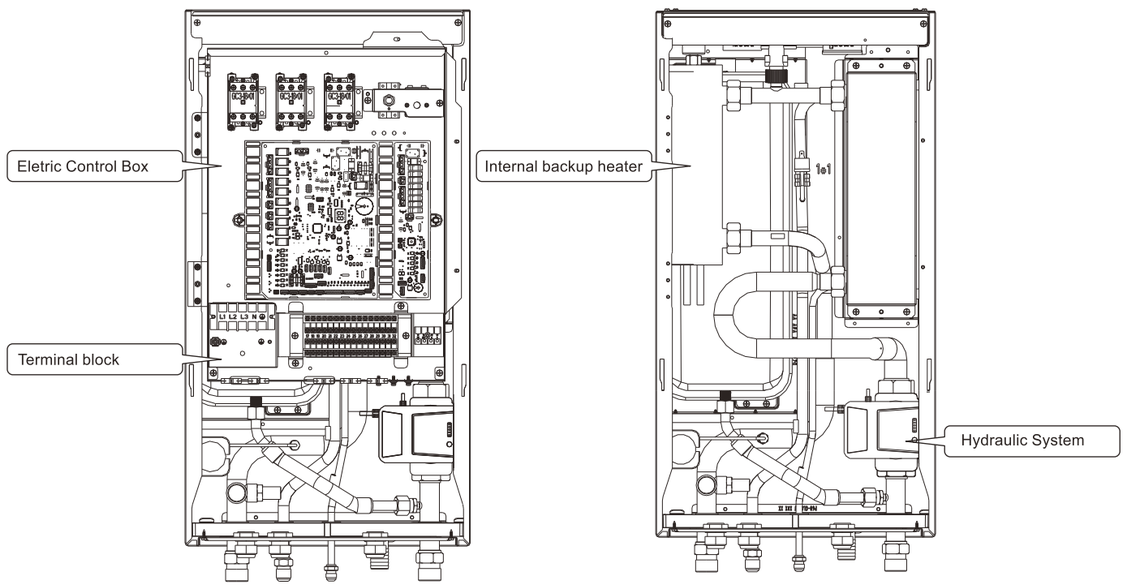

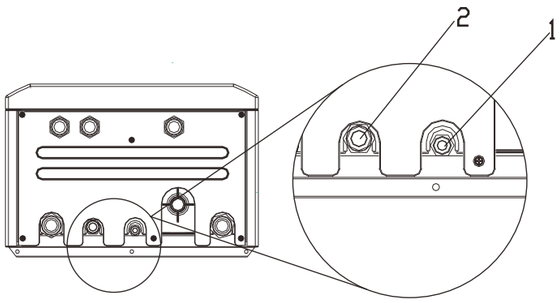

Unit	Diameter(mm)	
	1	2
6kW	9.52	15.9
16kW	9.52	15.9

1 SAFETY PRECAUTIONS

The precautions listed here are divided into following types . They are quite important ,so be sure to follow them carefully . Read these instructions carefully before installation . Keep this manual in a handy for future preference. Meanings of DANGER,CAUTION and NOTE symbols.

DANGER	Indicates an imminently hazardous situation which if not avoided , will result in death or serious injury.
WARNING	Indicates a potentially hazardous situation which if not avoided , could result in death or serious injury.
CAUTION	Indicates a potentially hazardous situation which if not avoided , may result in minor or moderate injury. It is also used to alert against unsafe practices.
NOTE	Indicates situations that could only result in accidental equipment or property damage.

WARNING

- Improper installation of equipment or accessories may result in electric shock , short-circuit , leakage , fire or other damage to the equipment . Be sure to only use accessories made by the supplier ,which are specifically designed for the equipment and make sure to get installation done by a certified person.
- All the activities described in this manual must be carried out by a licensed technician . Be sure to wear adequate personal protection equipment such as gloves and safety glasses while installing the unit or carrying out maintenance activities.

WARNING	Servicing shall only be performed as recommended by the equipment manufacturer. Maintenance and repair requiring the assistance of other skilled personnel shall be carried out under the supervision of the person competent in the use of flammable refrigerants.

Special requirements for R32

WARNING	● Do not have refrigerant leakage and open flame. ● Be aware that the R32 refrigerant does NOT contain an door.
WARNING	The appliance shall be stored so as to prevent mechanical damage and in a well-ventilated room without continuously operating ignition sources(example : open flames , an operating gas appliance)and have a room size.
NOTE	● Do not re-use joints which have been used already. ● Joints made in installation between parts of refrigerant system shall be accessible for maintenance purposes.
WARNING	Make sure installation , servicing , maintenance and repair comply with instractions and applicable legislation(for example national gas regulation)and are executed only by authorized persons.
NOTE	● Pipework should be protected from physical damage. ● Installation of pipework shall be kept to a minimum length.

In the total refrigerant charge in the system is <1.84kg(i.e. If the piping length is <20m for 8/10kw),there are no additional minimum floor area requiements.

If the total refrigerant charge in the system is ≥1.84kg(i.e. if the piping length is ≥20m for 8/10KW),you need to comply with additional minimum floor area refrigerant as describrd in the following flow chart .The flow chart uses the following tables: “Table 1-Maximum refrigerant charge allowed in a room :indoor unit ”on page 4,“ Table 2-Maximum floor area : indoor unit ” on page 4 and “ Table 3-Maximum venting opening area for natural ventilation :indoor unit ” on page 4.

If the piping length is 30m,then the minimum floor area is ≥4.5m2 ;if the floor area is less than 4.5m2,it need to trepanning a hole of 200cm².

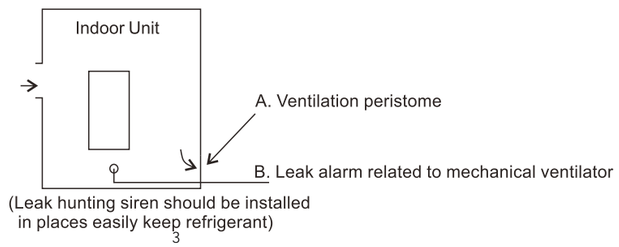

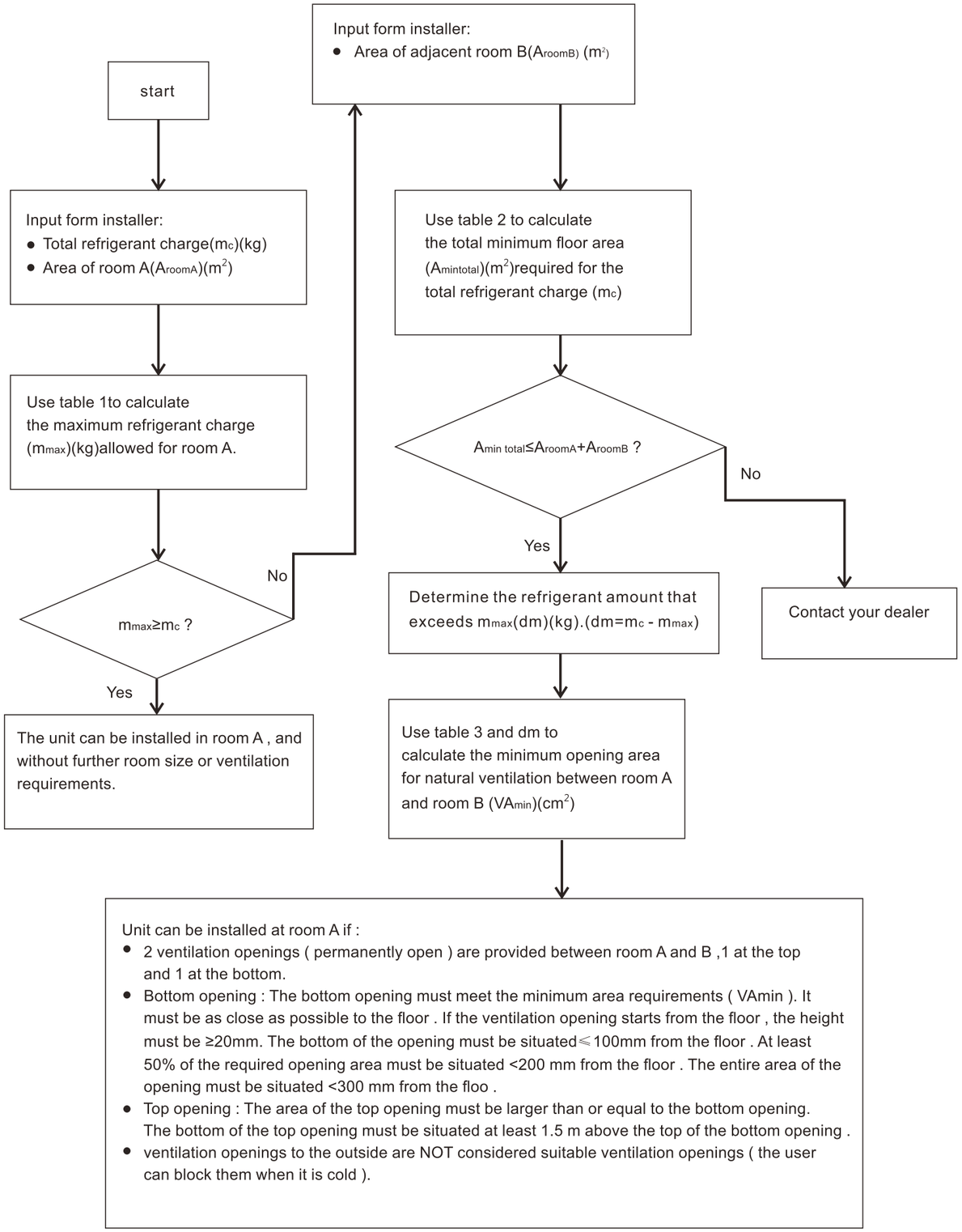

Table 1-Maximum refrigerant charge allowed in a room : indoor unit

Aroom (m^2)	Maximum refrigerantcharge in a room(m_{max})(kg)	Aroom (m^2)	Maximum refrigerantcharge in a room(m_{max})(kg)
	H=1800mm		H=1800mm
1	1.02	4	2.05
2	1.45	5	2.29
3	1.77	6	2.51

NOTE

- For wall mounted models, the value of : “Installation height (H)” is considered 1800 mm to comply to IEC 60335-2-40:2013 A1 2016 Clause GG2.
- For intermediate A_{room} values(i.e. when A_{room} is between two values from the table),consider the values that corresponds to the lower A_{room} value from the table. If A_{room} =3m^2,consider the value that corresponds to “A_{room}=3m^2”.

Table 2-Minimum floor area : indoor unit

m_c(kg)	Minimum floor area(m^2)
	H=1800mm
1.84	3.32
2.00	3.81
2.25	4.83
2.50	5.96

NOTE

- For wall mounted models , the value of “ Installation height (H)” is considered 1800 mm to comply to IEC 60335-2-40:2013 A1 2016 Clause GG2.
- For intermediate mc values (i.e. when m_c is between two values from the table), consider the value that corresponds to the higher m_c value from the table . If m_c =1.87kg, consider the value that corresponds to “m_c =1.87kg”.
  Systems with total refrigerant charge lower than 1.84kg are not subjected to any room requirements.

Table 3-Minimum venting opening area for natural ventilation :indoor unit

m_c	m_{max}	dm= m_c - m_{max}(kg)	Minimum venting opening area(cm^2)
			H=1800mm
2.22	0.1	2.21	495.14
2.22	0.3	1.92	448.43
2.22	0.5	1.72	401.72
2.22	0.7	1.52	355.01
2.22	0.9	1.32	308.30
2.22	1.1	1.12	261.59
2.22	1.3	0.92	214.87
2.22	1.5	0.72	168.16
2.22	1.7	0.52	121.45
2.22	1.9	0.32	74.74
2.22	2.1	0.12	28.03

NOTE

- For wall mounted models , the value of “ Installation height (H)” is considered 1800 mm to comply to IEC 60335-2-40:2013 A1 2016 Clause GG2.
- For intermediate dm values (i.e. when dm is between two values from the table), consider the value that corresponds to the higher dm value from the table . If dm =1.55kg, consider the value that corresponds to “dm =1.6kg".

DANGER

- Before touching electric terminal parts , turn off power switch .
- When service panels are removed , live parts can be easily touched by accident .
- Never leave the unit unattended during installation or servicing when the service panel is removed .
- Do not touch water pipes during and immediately after operation as the pipes may be hot and could burn your hands . To avoid injury , give the piping time to return to normal temperature or be sure to wear protective gloves .
- Do not touch any switch with wet fingers . Touching a switch with wet fingers can cause electrical shock .
- Before touching electrical parts , turn off all applicable power to the unit .

WARNING

- Tear apart and throw away plastic packaging bags so that children will not play with them . Children playing with plastic bags face danger of death by suffocation .
- Safely dispose of packing materials such as nails and other metal or wood parts that could cause injuries .
- Ask your dealer or qualified personnel to perform installation work in accordance with this manual . Do not install the unit by yourself . Improper installation could result in water leakage , electric shocks or fire
- Be sure to use only specified accessories and parts for installation work . Failure to use specified parts may result in water leakage , electric shocks , fire , or the unit falling from its mount .
- Install the unit on a foundation that can withstand its weight . Insufficient physical strength may cause the equipment to fall and possible injury .
- Perform specified installation work with full consideration of strong wind , hurricanes , or earthquakes . Improper installation work may result in accidents due to equipment falling .
- Make certain that al electrical work is carried out by qualified personnel according to the local laws and regulations and this manual using a separate circuit . Insufficient capacity of the power supply circuit or improper electrical construction may lead to electric shocks or fire .
- Be sure to install a ground fault circuit interrupter according to local laws and regulations . Failure to install a ground fault circuit interrupter may cause electric shocks and fire .
- Make sure all wiring is secure . Use the specified wires and ensure that terminal connections or wires are protected from water and other adverse external forces . Incomplete connection or affixing may cause a fire .
- When wiring the power supply , form the wires so that the front panel can be securely fastened . If the front panel is not in place there could be overheating of the terminals , electric shocks or fire .
- After completing the installation work , check to make sure that there is no refrigerant leakage .
- Never directly touch any leaking refrigerant as it could cause severe frostbite . Do not touch the refrigerant pipes during and immediately after operation as the refrigerant pipes may be hot or cold , depending on the condition of the refrigerant flowing through the refrigerant piping , compressor and other refrigerant cycle parts . Burns or frostbite are possible if you touch the refrigerant pipes . To avoid injury , give the pipes time to return to normal temperature or , if you must touch them , be sure to wear protective gloves .
- Do not touch the internal parts (pump , backup heater , etc .) during and immediately after operation . Touching the internal parts can cause burns . To avoid injury , give the internal parts time to return to normal temperature or , if you must touch them , be sure to wear protective gloves .

CAUTION

- Ground the unit .
- Grounding resistance should be according to local laws and regulations .
- Do not connect the ground wire to gas or water pipes , lightning conductors or telephone ground wires .
- Incomplete grounding may cause electric shocks .
  -Gas pipes : Fire or an explosion might occur if the gas leaks .
  -Water pipes : Hard vinyl tubes are not effective grounds .
  -Lightning conductors or telephone ground wires : Electrical threshold may rise abnormally if struck by a lightning bolt .

CAUTION

- Install the power wire at least 3 feet (1 meter) away from televisions or radios to prevent interference or noise. (Depending on the radio waves , a distance of 3 feet (1 meter) may not be sufficient to eliminate the noise.)
- Do not wash the unit . This may cause electric shocks or fire . The appliance must be installed in accordance with national wiring regulations . If the supply cord is damaged , it must be replaced by the manufacturer , its service agent or similarly qualified persons in order to avoid a hazard.
- Do not install the unit in the following places :
  - Where there is mist of mineral oil , oil spray or vapors . Plastic parts may deteriorate , and cause them to come loose or water to leak.
  - Where corrosive gases (such as sulphurous acid gas) are produced .Where corrosion of copper pipes or soldered parts may cause refrigerant to leak.
  - Where there is machinery which emits electromagnetic waves . Electromagnetic waves can disturb the control system and cause equipment malfunction.
  - Where flammable gases may leak , where carbon fiber or ignitable dust is suspended in the air or where volatile flammables such as paint thinner or gasoline are handled . These types of gases might cause a fire.
  -Where the air contains high levels of salt such as near the ocean.
  - Where voltage fluctuates a lot , such as in tactories.
  - In vehicles or vessels.
  - Where acidic or alkaline vapors are present.
- This appliance can be used by children 8 years old and above and persons with reduced physical , sensory or mental capabilities or lack of experience and knowledge if they are supervised or given instruction on using the unit in a safe manner and understand the hazards involved . Children should not play with the unit . Cleaning and user maintenance should not be done by children without supervision.
- Children should be supervised to ensure that they do not pay with the appliance.
  If the supply cord is damaged , it must be replaced by the manufacturer or its service agent or a similarly qualified person.
- DISPOSAL : Do not dispose this product as unsorted municipal waste . Collection of such waste seperatelly for special treatment is necessary. Do not dispose of electrical appliances as municipal waste , use seperate collection facilities . Contact your local goverment for information regarding the collection systems available . If electrical appliances are disposed of in landfills or dumps , hazardous substance can leak into the groudwater and get into the food chain , damaging your health and well-being.
- The wiring must be performed by certified person technicians in accordance with national wiring regulation and this circuit diagram . An all-pole disconnection device which has at least 3 mm seperation distance in all pole and a residualcurrent device (RCD) with the rating not exceeding 30mA shall be incorporated in the fixed wiring according to the national rule.
- Confirm the safety of the installation area (walls , floors , etc .) without hidden dangers such as water , electricity , and gas before wiring/pipes.
- Before installation , check whether the user's power supply meets the electrical installation requirements of unit (including reliable grounding , leakage , and wire diameter electrical load , etc .). If the electrical installation requirements of the product are not met , the installation of the product is prohibited until the product is rectified.
- Product installation should be fixed firmly , Take reinforcement measures , when necessary.

CAUTION

- About Fluorinated Gases
  - This air-conditioning unit contains fluorinated gases. For specific information on the type of gas and the amount, please refer to the relevant label on the unit itself. Compliance with national gas regulations shall be observed.
  - Installation, service , maintenance and repair of this unit must be performed by a certified technician.
  - Product uninstallation and recycling must be performed by a certified technician.
  - If the system has a leak-detection system installed, it must be checked for leaks at least every 12 months. When the unit is checked for leaks, proper record-keeping of all checks is strongly recommended.

2 BEFORE INSTALLATION

• Before installation

Be sure to confirm the model name and the serial number of the unit .

CAUTION

Frequency of Refrigerant Leakage Checks
- For unit that contains fluorinated greenhouse gases in quantities of 5 tonnes of CO_2 equivalent or more , but of less than 50 tonnes of CO_2 equivalent, at least every 12 months, or where a leakage detection system is installed, at least every 24 mouths.
-For unit that contains fluorinated greenhouse gases in quantities of 50 tonnes of CO_2 equivalent or more , but of less than 500 tonnes of CO_2 equivalent, at least every six months, or where a leakage detection system is installed, at least every 12 months.
- For unit that contains fluorinated greenhouse gases in quantities of 500 tonnes of CO_2 equivalent or more, at least every three months, or where a leakage detection system is installed, at least every six months.
- This air-conditioning unit is a hermetically sealed equipment that contains fluorinated greenhouse gases.
- Only certificated person is allowed to do installation, operation and maintenance.

3 INSTALLATION SITE

WARNING

- There is flammable refrigerant in the unit and it should be installed in a well-ventilated site . If the unit is installed inside, an additional refrigerant detection device and ventilation equipment must be added in accordance with the standard EN378. Be sure to adopt adequate measures to prevent the unit from being used as a shelter by small animals.
- Small animals making contact with electrical parts can cause malfunction , smoke or fire . Please instruct the customer to keep the area around the unit clean.
  The equipment is not intended for use in a potentially explosive atmosphere.
- Select an installation site where the following conditions are satisfied and one that meets with your customer's approval .
  - Places that are well-ventilated.
  - Safe places which can bear the unit's weight and vibration and where the unit can be installed at an even level.
  - Places where there is no possibility of flammable gas or product leak.
  - The equipment is not intended for use in a potentially explosive atmosphere.
  - Places where servicing space can be well ensured.
  - Places where the units'piping and wiring lengths come within the allowable ranges .
  - Places where water leaking from the unit cannot cause damage to the location (e.g.in case of a blocked drain pipe).
  - Do not install the unit in places often used as a work space . In case of construction work (e.g.grinding etc .) where a lot of dust is created , the unit must be covered.
  - Do not place any object or equipment on top of the unit (top plate)
  - Do not climb , sit or stand on top of the unit.
  - Be sure that sufficient precautions are taken in case of refrigerant leakage according to relevant local laws and regulations.

CAUTION

The indoor unit should be installed in an indoor water proof place, or the safety of the unit and the operator cannot be ensured.
- The indoor unit is to be wall mounted in an indoor location that meets the following requirements:
- The installation location is frost-free.
- The space around the unit is adequate for serving , see 4-2.
- The space around the unit allows for sufficient air circulation.
- There is a provision for condensate drain and pressure relief valve blow-off.

CAUTION

When the unit running in the cooling mode, condensate may drop from the water inlet and water outlet pipes. Please make sure the dropping condensate will not result in damage of your furniture and other devices.
The installation surface is a flat and vertical non-combustible wall, capable of supporting the operation weight of the unit.
All piping lengths and distance have been taken into consideration.

Table 3-1

Requirement	Value
Maximum allowable piping length between the 3-way valve 3MV1 and the indoor unit (only for installations with domestic hot water tank)	3m
Maximum allowable piping length between the domestic hot water tank and the indoor unit (only for installations with domestic hot water tank). The temperature sensor cable supplied with the indoor unit is 10m in length.	8m
Maximum allowable piping length between the TWI_FLH and the indoor unit . The temperature sensor a cable of TWI_FLH supplied with the indoor unit is 10m in length.	8m

4 INSTALLATION PRECAUTIONS

4.1Dimensions

(unit:mm)

Dimensions of the wall bracket:

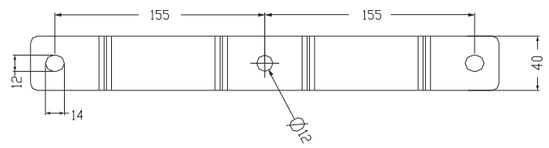

Dimensions of the unit:

(unit:mm)

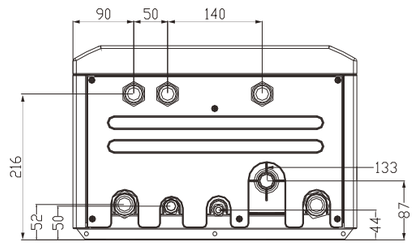

(unit:mm)

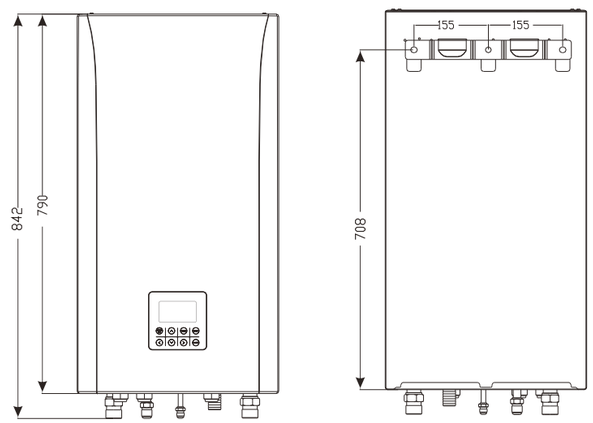

NO.	NAME
1	Refrigerant gas connection 5/8"
2	Refrigerant liquid connection 3/8"
3	Drainage φ25
4	Water Inlet R1"
5	Water Outlet R1"

4.2 Installation requirements

- The indoor unit is packed in a box.
- At delivery, the unit must be checked and any damage must be reported immediately to the carrier claims agent .
- Check if all indoor unit accessories are enclosed .
- Bring the unit as close as possible to the final installation position in its original package in order to prevent damage during transport.
- The indoor unit weight is approximately 50kg and should be lifted by two persons.

WARNING

Do not grasp the control box or pipe to lift the unit

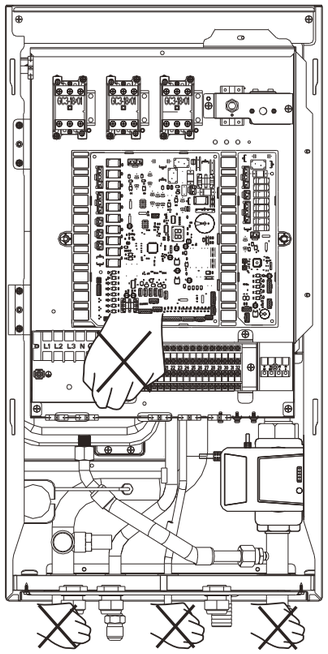

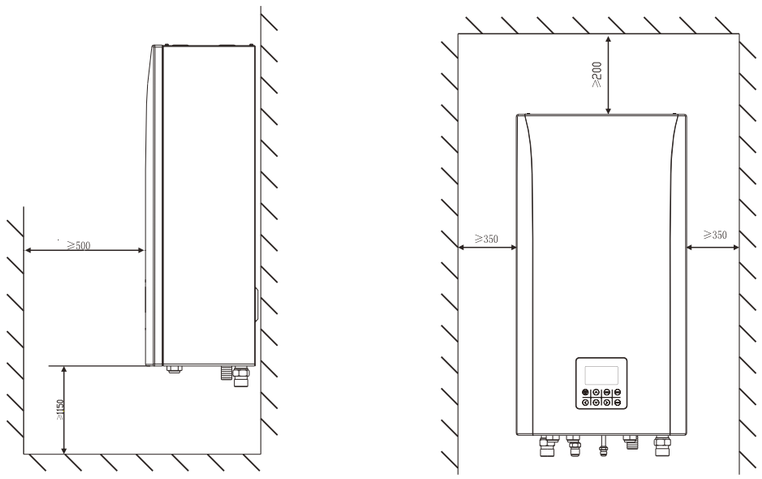

4.3 Mounting the indoor unit

- Fix the wall mounting bracket to the wall using appropriate plugs and screws.
- Make sure the wall mounting bracket is horizontal level.
- Pay special attention to prevent overflow of the drain pan.
- Hang the indoor unit on the wall mounting bracket.

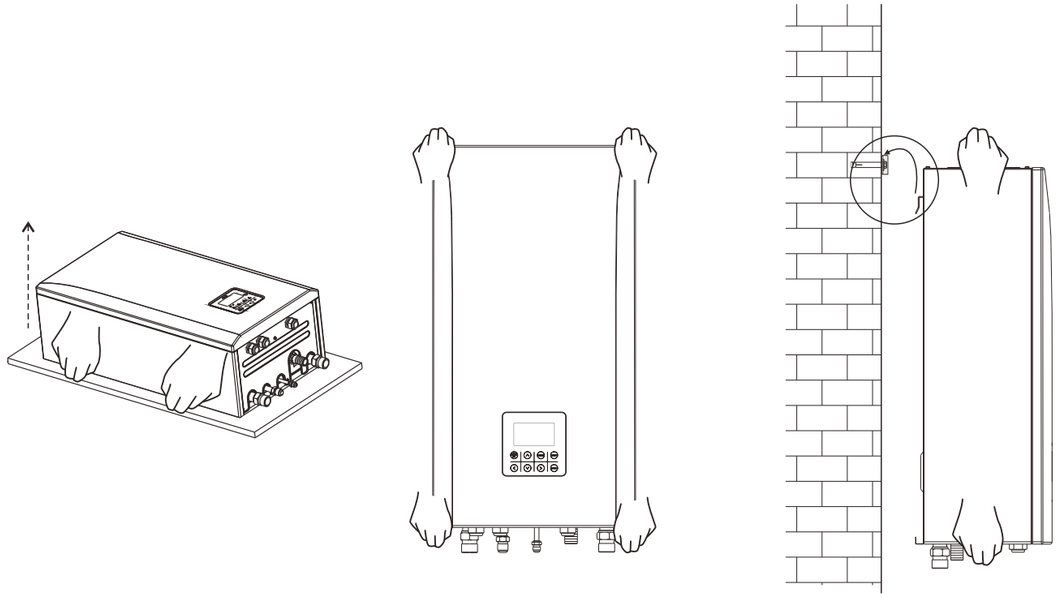

4.4 Refrigerant pipe connection

- Align the center of the pipes.
- Sufficiently tighten the flare nut with fingers , and then tighten it with a spanner and torque wrench.
- The protective nut is a one-time part , it can be reused , In case it is removed , it should be replaced with a new one.
- Hang the indoor unit on the wall mounting bracket.
- During the connection of refrigerant pipes and water pipes, heat preservation must be carried out. Do not expose the pipes.

Outer diam.	Tightening torque (N.cm)	Additional tightening torque(N.cm)
φ9.52	2500 (255kgf.cm)	2600 (265kgf.cm)
φ15.9	4500 (459kgf.cm)	4700 (479kgf.cm)

CAUTION

- Excessive torque can break nut on installation conditions.
- When flared joints are reused indoors , the flare part should be re-fabricated.

5 GENERAL INTRODUCTION

These units are used for both heating and cooling applications and domestic hot water tanks.They can be combined with fan coil units, floor heating applications, low temperature high efficiency radiators, domestic hot water tanks (field supply) and solar kits (field supply).
A wired controller is supplied with the unit,
If you choose the built-in backup heater unit, the backup heater can increase the heating capacity during cold outdoor temperatures. The backup heater also serves as a backup in case of malfunctioning and for frozen protection of the outside water piping during winter time.

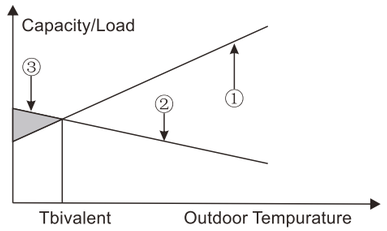

①Heat pump capacity.
②Required heating capacity (site dependent).
③Additional heating capacity provided by backup heater

Domestic hot water tank (field supply)

A domestic hot water tank (with or without booster heater)can be connected to the unit.
The requirement of the tank is different for different unit and material of heat exchanger.

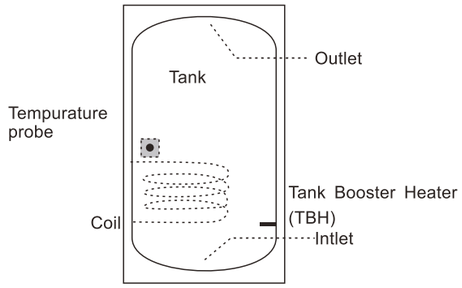

The booster heater should be installed below the temperature probe.
The heat exchanger (coil)should be installed below the temperature probe.

Indoor Unit		6kW	16kW
Volume of tank/L	Recommended	100~250	200~500
Heat exchange area/m^2(Stainless steel coil)	Minimum	1.4	1.6
Heat exchange area/m^2(Enamel coil)	Minimum	2.0	2.5

Operation range

Operationg range of indoor unit		
Outlet water (Heating mode)		+25~+65℃
Outlet water (Cooling mode)		+5~+25℃
Domestic hot water		+25~+60℃
Water pressure		0.1~0.3Mpa
Water flow	6kW	0.40~1.25m^3/h
	16kW	0.70~3.00m^3/h

6 ACCESSORIES

Thermistor and extension wire for TWT_BT/ TWI_FLH/ TWT/Tsolar can be shared ,if these functions are needed at the same time,and 10m in length of the sensor cable please order these thermistors and extension wire additionally.

Name	Quantity	
	6kW	16kW
Indoor unit installation and owner's manual	1	1
Operation manual	1	1
M8 expansion screws	3	3
Temperature sensor for domestic hot water tank	1	1
Y-shaped filter	1	1
Mounting bracket	1	1
WiFi module and instruction manual(optional)	1	1
M10 Copper nut	1	1
M16 Copper nut	1	1
Temperature sensor adapter	2	2

7 Typical Applications

7.1 Space Heating Only

The room thermostat is used as a switch. When there is a heating request from the room thermostat, the unit operates to achieve the target water temperature set on the Wired controller. When the room temperature reaches the thermostats set temperature, the unit stops.
When the heating terminal uses floor heating and Heating radiator at the same time, the two ends of the floor heating and low temperature radiator require different working water temperatures. In order to meet these two different working water temperatures at the same time, it is necessary to install a mixing valve and a mixing water pump at the inlet and outlet of the floor heating , The outlet water temperature of the unit is set to the water temperature required by the heating radiator, and the water mixing valve and water mixing pump are set to reduce the inlet water temperature of the floor heating.

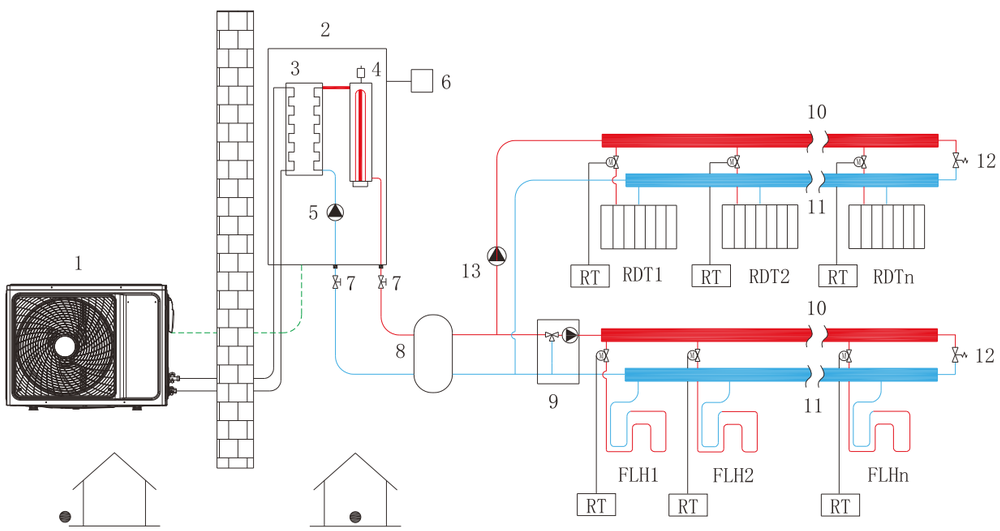

REMARK			
1	Outdoor unit	9	Mixing valve and mixing water pump
2	Hydronic box	10	Distributor
3	Plate heat exchanger	11	Collector
4	Backup electric heater(optional)	12	Bypass valve
5	Internal circulator pump	13	External circulation pump
6	Wired controller	RDT	Heating radiator
7	Stop valve	FLH	Floor heating loops
8	Balance water tank	RT	Room thermostat

7.2 Space Heating and Domestic Hot Water

The room thermostats also can connect to a motorized valve. Each rooms temperature is regulated by the motorized valve on its water circuit. Domestic hot water is supplied from the domestic hot water tank connected to the hydronic box. The water tank should built in a temperature sensor which connect to the hydronic box. A bypass valve is required.

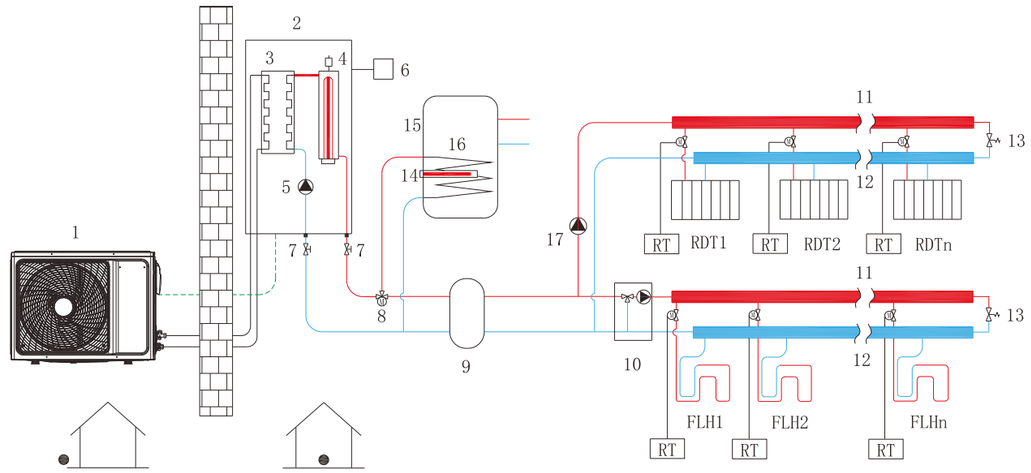

REMARK			
1	Outdoor unit	11	Distributor
2	Hydronic box	12	Collector
3	Plate heat exchanger	13	Bypass valve
4	Backup electric heater	14	Electric heating
5	Internal circulator pump	15	Domestic hot water tank
6	Wired controller	16	Coil in the water tank
7	Stop valve (field supplied)	17	External circulation pump
8	Motorized 3way valve	RDT	Heating Radiator
9	Balance water tank	FLH	Floor heatingloops
10	Mixing valve and mixing water pump	RT	Room thermostat

7.3 Space Heating, Space Cooling and Domestic Hot Water

Floor heating loops & Heating radiator & Fan coil units are used for space heating , fan coil units are used for space cooling. Domestic hot water is supplied from the domestic hot water tank connected to the hydronic box. The unit switches to heating or cooling mode according to the temperature detected by the room thermostat. In space cooling mode, the 2way valve is closed to prevent cold water entering the floor heating loops & Heating radiator.

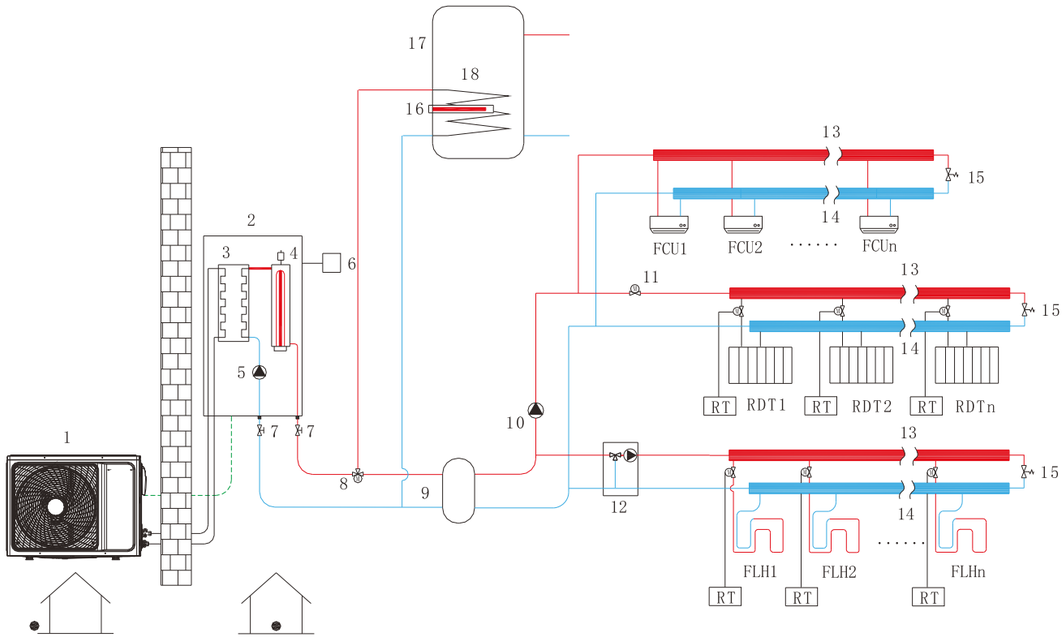

REMARK			
1	Outdoor unit	12	Mixing valve and mixing water pump
2	Hydronic box	13	Distributor
3	Plate heat exchanger	14	Distributor
4	Backup electric heater(optional)	15	Bypass valve
5	Internal circulator pump	16	Electric heating
6	Wired controller	17	Domestic hot water tank
7	Stop valve	18	Coil in the water tank
8	Motorized 3way valve	RDT	Heating Radiator
9	Balance water tank	FLH	Floor heating loops
10	External circulation pump	FCU	Fan coil units
11	Twoway valve	RT	Room thermostat

7.4 Space Heating and Space Cooling

Floor heating loops & Heating radiator & fan coil units are used for space heating , fan coil units are used for space cooling. In space cooling mode, the 2way valve is closed to prevent cold water entering the floor heating loops & Heating radiator.

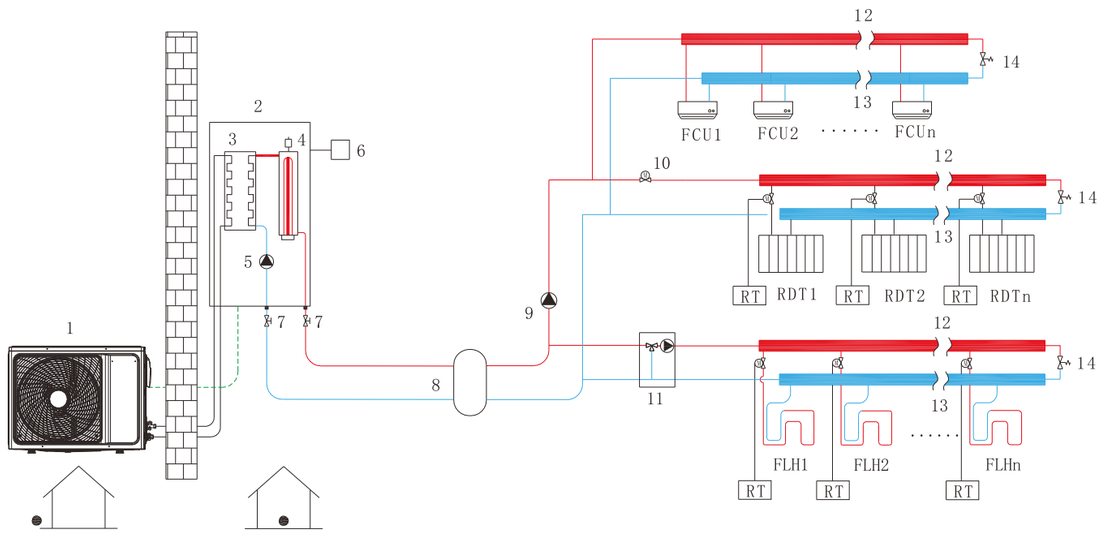

Remark			
1	Outdoor unit	10	Twoway valve
2	Hydronic box	11	Mixing valve and mixing water pump
3	Plate heat exchanger	12	Distributor
4	Backup electric heater(optional)	13	Distributor
5	Internal circulator pump	14	Bypass valve
6	Wired controller	RDT	Radiator
7	Stop valve	FLH1n	Floor heating loops
8	Balance water tank	FCU	Fan coil units
9	External circulation pump	RT	Room thermostat

7.5 Auxiliary heat source provides space heating only

Users can also use only gas water heaters for heating.

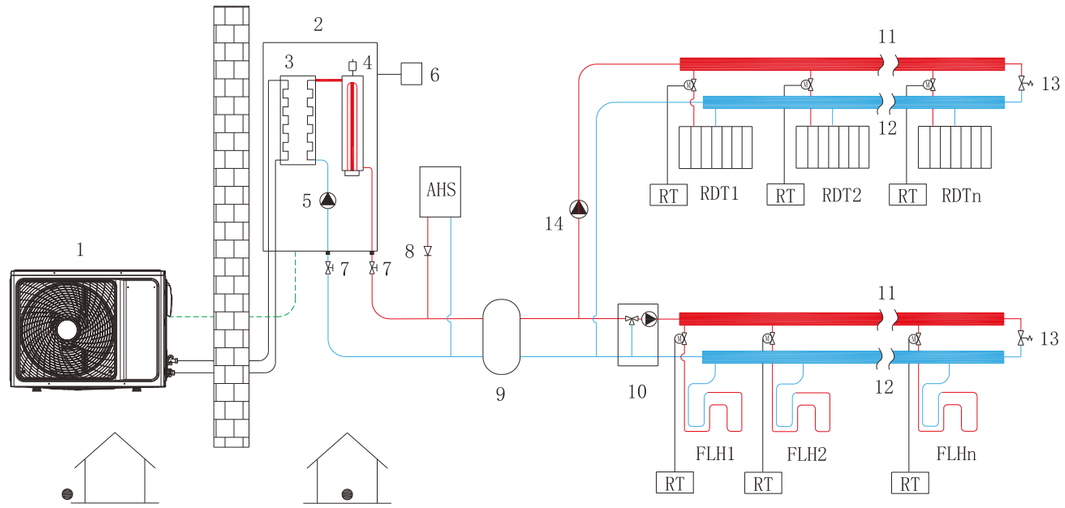

REMARK			
1	Outdoor unit	10	Mixing valve and mixing water pump
2	Hydronic box	11	Distributor
3	Plate heat exchanger	12	Water collector
4	Backup electric heater(optional)	13	Bypass valve
5	Internal circulator pump	14	External circulation pump
6	Wired controller	RDT	Heating Radiator
7	Stop valve	FLH	Floor heating loops
8	oneway valve	AHS	Auxiliary heating source
9	Balance water tank	RT	Room thermostat

7.6 Space Heating Through Floor Heating Loops and Fan Coil Units

The floor heating loops and fan coil units require different operating water temperatures. To achieve these two set points, a mixing station is required. Room thermostats for each zone are optional.
The outlet water temperature of the unit is set to the water temperature required by the fan coil unit, and the mixing valve and mixing pump are set to reduce the inlet water temperature of the floor heating.

Space heating through floor heating loops and fan coil units.

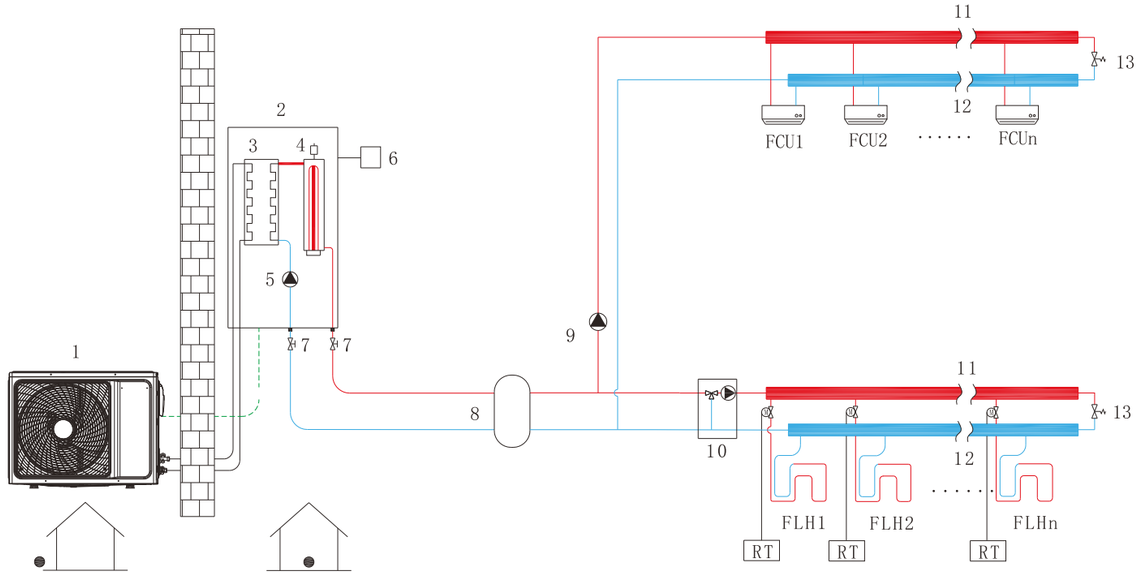

REMARK			
1	Outdoor unit	9	External circulation pump
2	Hydronic box	10	Mixing valve and mixing water pump
3	Plate heat exchanger	11	Distributor
4	Backup electric heater(optional)	12	Distributor
5	Internal circulator pump	13	Bypass valve
6	Wired controller	FCU	Fan coil units
7	Stop valve	FLH	Floor heating loops
8	Balance water tank	RT	Room thermostat

7.7 Space Heating, Space Cooling and Domestic Hot Water Compatible with Solar Water Heater

Floor heating loops & Heating Radiator &fan coil units are used for space heating, and fan coil units are used for space cooling. The temperature in the domestic hot water tank is controlled by the hydronic box. A temperature sensor needs to be placed in the domestic hot water tank and connected to the hydronic box. When it is detected that the temperature of the domestic hot water tank is lower than the set temperature and meets the requirements for solar hot water activation When conditions are met, turn on the solar water pump to realize the solar hot water function.

Space heating, space cooling and domestic hot water compatible with solar water heater

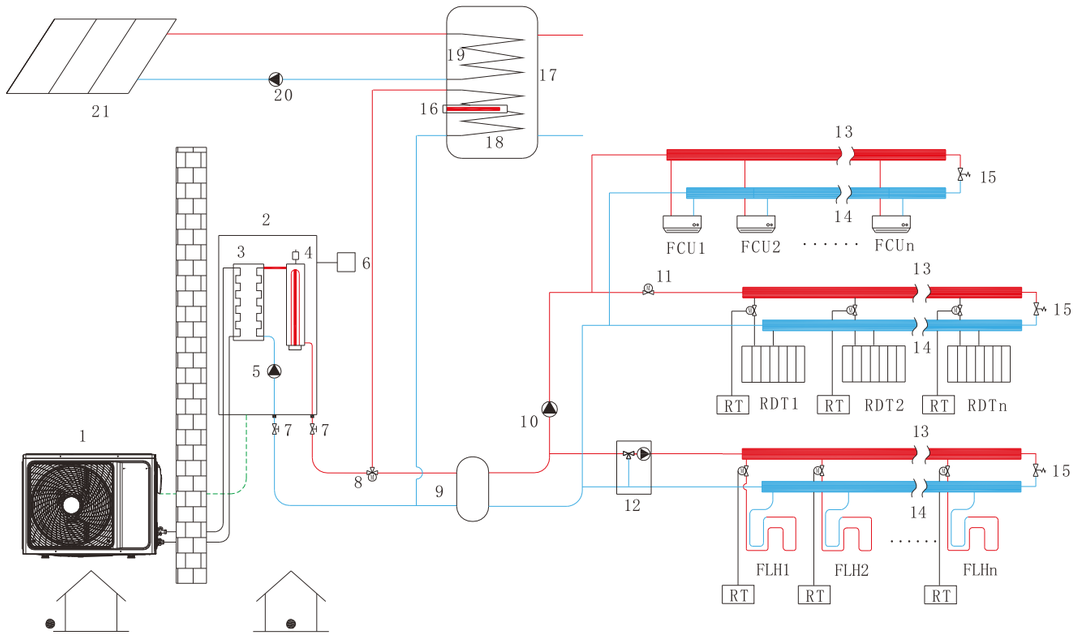

REMARK			
1	Outdoor unit	14	Distributor
2	Hydronic box	15	Bypass valve
3	Plate heat exchanger	16	Electric heating
4	Backup electric heater(optional)	17	Domestic hot water tank
5	Internal circulator pump	18	Coil 1 in the water tank
6	Wired controller	19	Coil 2 in the water tank
7	Stop valve	20	solar water pump
8	Motorized 3way valve	21	Solar panel
9	Balance water tank	RDT	Heating Radiator
10	External circulation pump	FLH	Floor heating loops
11	Twoway valve	FCU	Fan coil units
12	Mixing valve and mixing water pump	RT	Roomthermostat
13	Distributor		

7.8 Space Heating with heat pump and AHS, space cooling with heat pump and solar for hot water

When the heating insufficient, the gas boiler (AHS) is used as an additional heat source, and floor heating or fan coils or low temperature radiators are used for space heating (also can be used in combination with various types of terminals), The fan coil is used for space cooling. The temperature in the domestic hot water tank is controlled by the hydronic box. A temperature sensor needs to be placed in the domestic hot water tank and connected to the hydronic box. When it is detected that the temperature of the domestic hot water tank is lower than the set temperature and meets the requirements for solar hot water activation When conditions are met, turn on the solar water pump to realize the solar hot water function.

Space Heating with heat pump and AHS, space cooling with heat pump and solar for hot water

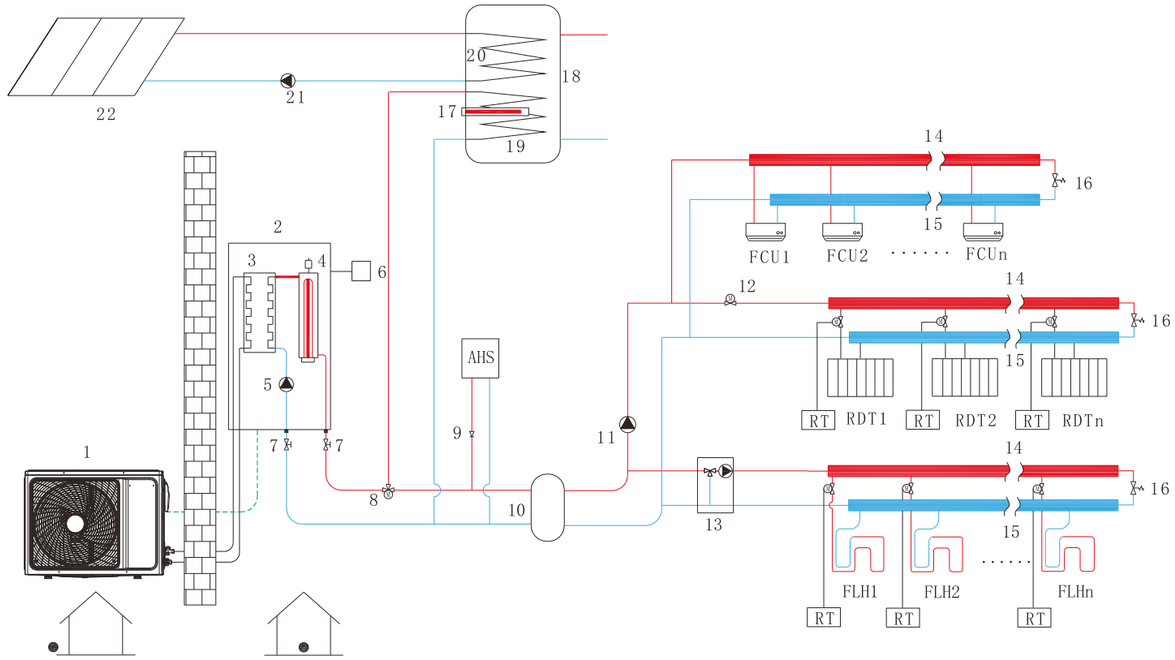

REMARK			
1	Outdoor unit	14	Distributor
2	Hydronic box	15	Distributor
3	Plate heat exchanger	16	Bypass valve
4	Backup electric heater(optional)	17	Electric heating
5	Internal circulator pump	18	Domestic hot water tank
6	Wired controller	19	Coil 1 in the water tank
7	Stop valve	20	Coil 2 in the water tank
8	Motorized 3way valve	21	solar water pump
9	oneway valve	22	Solar panel
10	Balance water tank	RDT	Radiator
11	External circulation pump	FLH	Floor heating loops
12	oneway valve	FCU	Fan coil units
13	Mixing valve and mixing water pump	RT	Room thermostat

CAUTION

Make sure to connect the 3MV1/2MV/3MV2 terminals in the wired controller correctly,please refer to 8.3

The Balance tank volume requirement

NO.	Indoor unit model	Balance tank(L)
1	6kW	⩾25
2	16kW	⩾40

8 OVERVIEW OF THE UNIT

8.1 Disassembling the unit

The indoor unit cover can be removed by removing the 2 screws and unhitching the cover.

CAUTION

Make sure fix the cover with screws and nylon washers when installing the cover (screws are delivered as accessory).Parts inside the unit can be hot.To gain access to the control box components-e.g to connect the field wiring-the control box service panel can be removed.Thereto,loosen the front screws and unhitch the control box service panel.

CAUTION

Switch off all power supply-i.e outdoor unit power supply,indoor unit power supply,electric heater and additional heater power supply before removing the control box service panel.

8.2 Main components

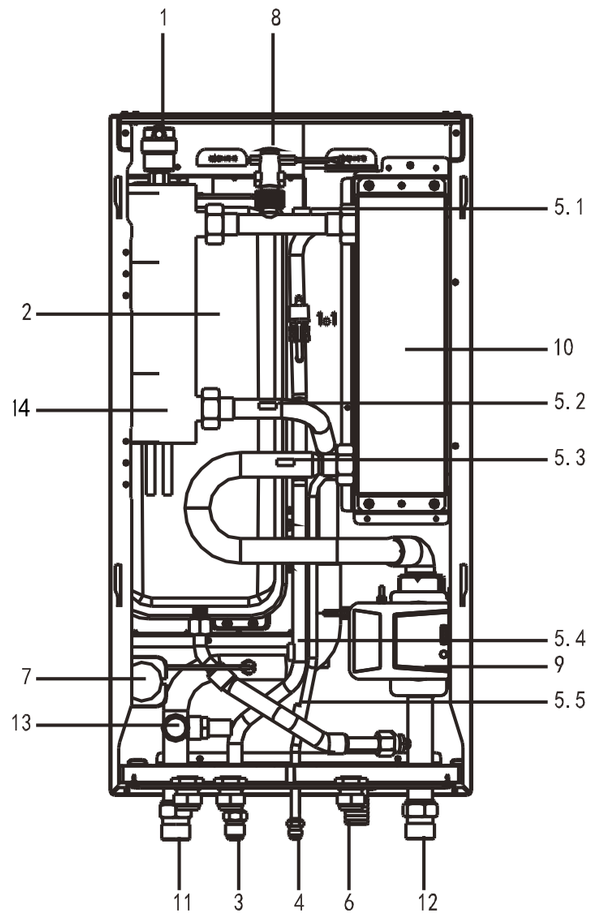

Code	Assembly unit	Explaination
1	Automatic air purge valve	Remaining air in the water circuit will be automatically removed via the automatic air purge valve
2	Expansion vessel(8L)	/
3	Refrigerant gas pipe	/
4	Refrigerant liquid pipe	/
5	Temperature sensors	Five temperature sensors determine the water and refrigerant temperature at various points(5.1 , 5.2, 5.3, 5.4, 5.5)
6	Drainage port	/
7	Manometer	The manometer allows readout of the water pressure in the water circuit
8	Flow switch	If water flow is below 0.6m³/h，the flow Switch open(16kW) If water flow is below 0.36m³/h，the flow Switch open(6kW)
9	Pump_i	The pump circulates the water in the water circuit.
10	Plate heat exchanger	Heat exchanging between water and refrigerant
11	Water outlet pipe	/
12	Water inlet pipe	/
13	Pressure relief valve	The pressure relief valve prevents excessive water pressure in the water circuit by opening at 43.5 psi(g)/0.3Mpa(g) and discharging some water
14	Internal backup heater	The backup heater consists of an electrical heating element that will provide additional heating capacity to the water circuit if the heating capacity of the unit is insufficient due to low outdoor temperature, it also protects the external water piping from freezing during cold periods

8.3 Electronic control box

The figure is only for reference, please refer to the actual product.

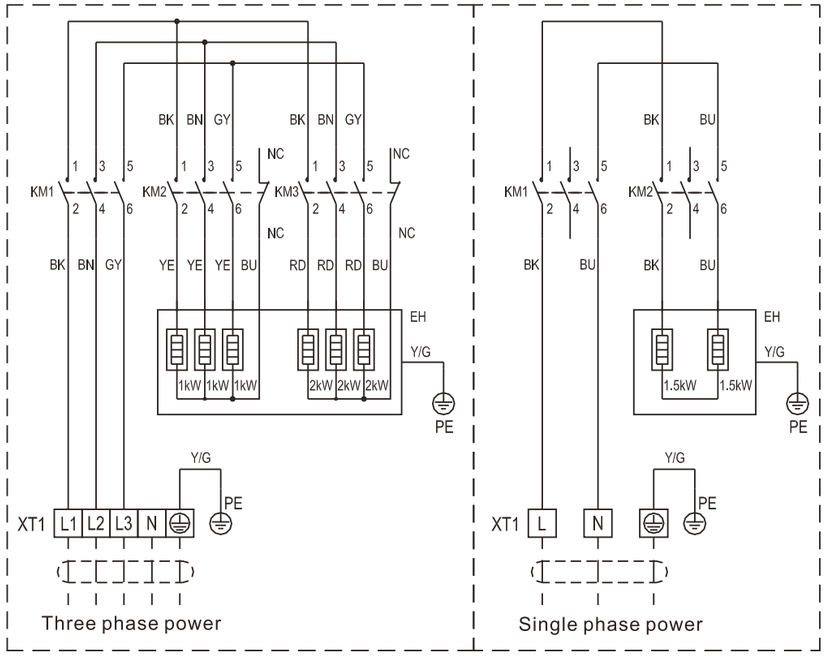

Position description

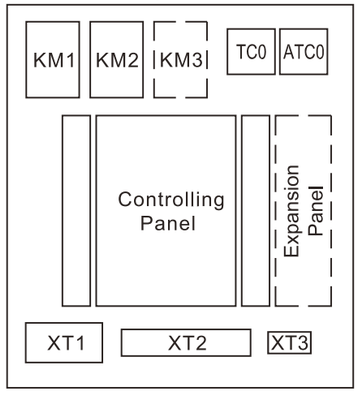

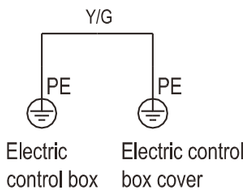

Components description:

KM1	AC Contactor1
KM2	AC Contactor2
KM3	AC Contactor3
TCO	Thermostat
ATCO	Automatic Thermostat
AFLP	Anti-freezing Low Pressure Switch
FLS	Water flow switch
EH	Electric Heater
XT1	Power terminal board
XT2	Terminal board (32P)
XT3	Terminal board (4P)
3WV1	3-Way Valve1
3WV2	3-Way Valve2
2WV	2-Way Valve
KM4	Zone1 PUMP AC Contactor4
KM5	DHW PIPE PUMP AC Contactor5
KM6	Electric heating for water tank AC contactor6
KM7	Antifreeze E-heating tape AC Contactor7
KM8	Solar PUMP AC contactor8
KM9	Zone 2 PUMP AC contactor9
KM10	Additional heat source AC contactor10
TWO1	Outlet water temp. sensor of plate heat exchanger
TWO2	Outlet water temp. sensor of Electric heating
TWI	Inlet water temp. sensor of plate heat exchanger
TICO	Evaporator Outlet Sensor
TICI	Evaporator Inlet Sensor
TWT_BT	Balance tank temp. sensor
TWI _FLH	Floor heating water inlet temp. sensor
TWT	Tank water temp. sensor
ROOM	Room temp. sensor
TSOLAR	Solar panel temp. sensor

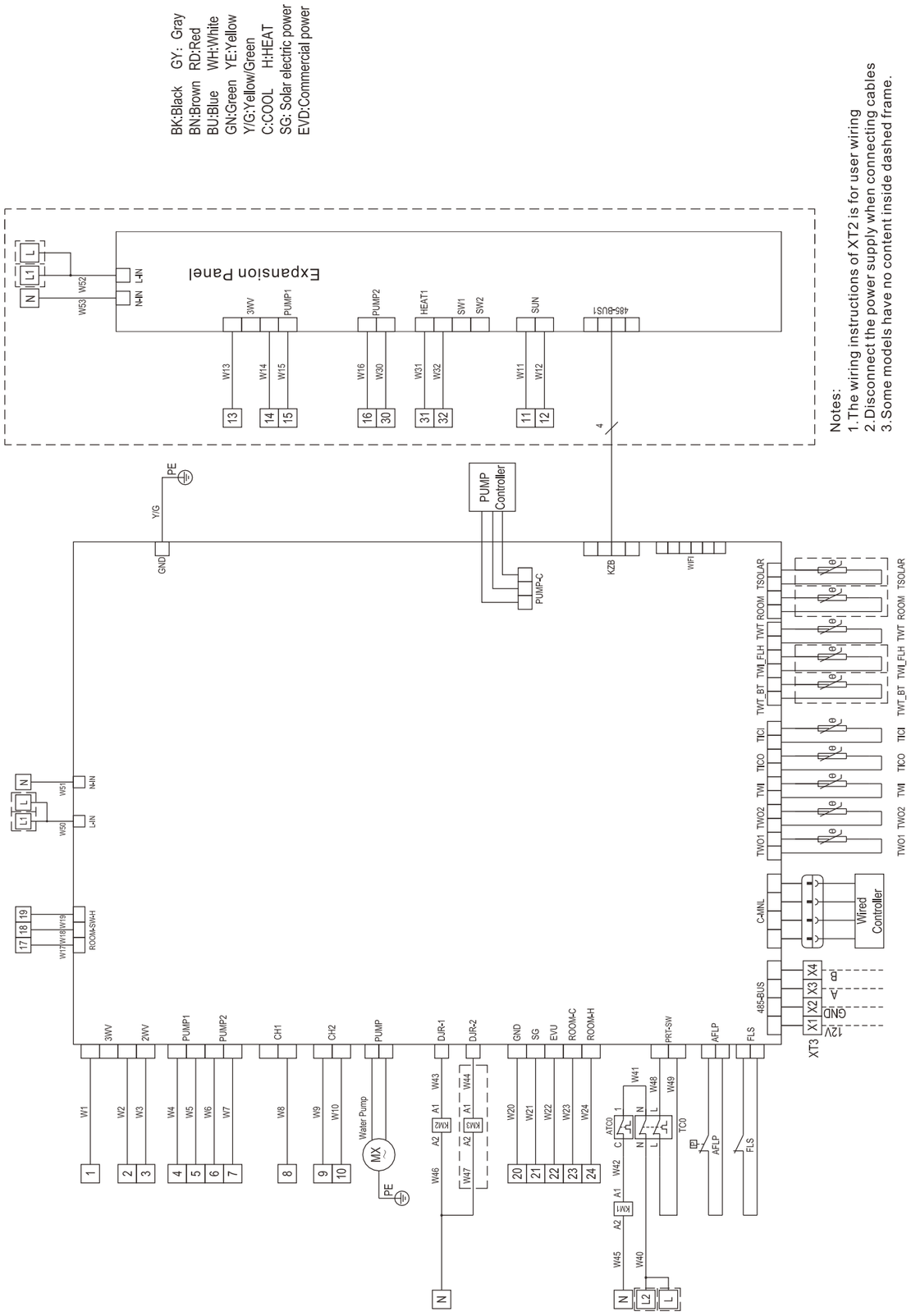

8.3.1 Specifications of standard wiring components

Equipment main Power Supply Wiring

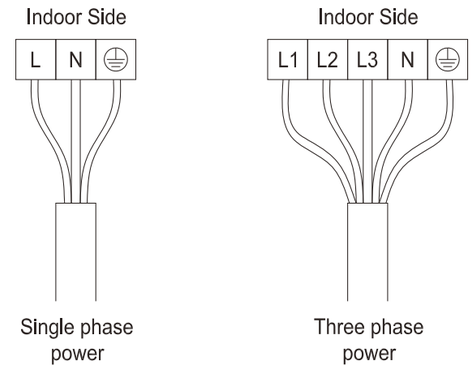

- Stated values are maximum values(see electrical data for exact values).

Unit	6kW(3kW-1PH heater)	16kW(9kW-3PH heater)	16kW(3kW-1PH heater)
Wiring size(mm^2)	4.0	4.0	4.0

CAUTION

When connecting to the power supply terminal, use the circular wiring terminal with the insulation casing (see Figure 8.1). Use power cord that conforms to the specifications and connect the power cord firmly. To prevent the cord from being pulled out by external force, make sure it is fixed securely.

Figure 8.1

NOTE

The ground fault circuit interrupter must be a high-speed type breaker of 30 mA (<0.1 s).Flexible cord must meet 60245IEC(HO5VV-F) standards.

8.3.2 Connection for other components

Port provide the signal with 220V voltage. If the current of load is < 0.2A load can connect to the port directly. If the current of load is 0.2A, the AC contactor is required to connected for the load.

1) For solar energy input signal

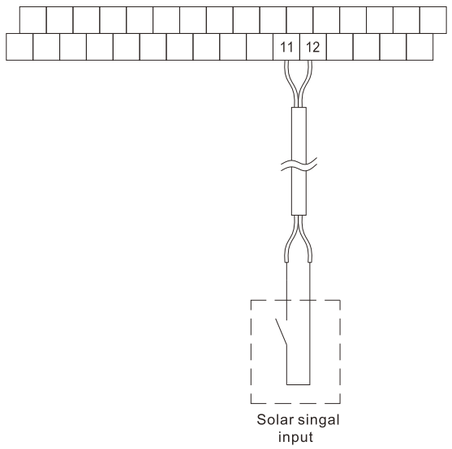

Voltage	220-240VAC
Maximum running current(A)	0.2
Wiring size(mm^2)	0.75

2)For 3-way value 3WV1、2WV 、3WV2 and Solar pump

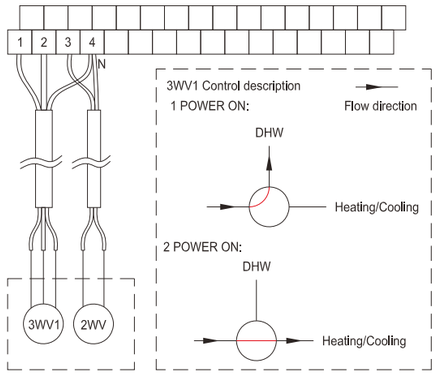

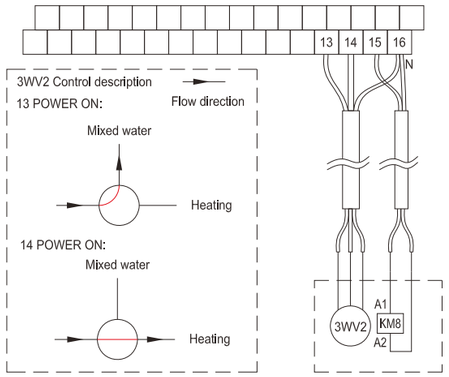

Voltage	220-240VAC
Maximum running current(A)	0.2
Wiring size(mm^2)	0.75

a)Procedure
Connect the cable to the appropriate terminals as shown in the picture.Fix the cable reliably.
3WV1: Motorized 3way valve
2WV: Two way valve
3WV2: Mixing valve

3)For Zone1 pump and DHW pipe pump:

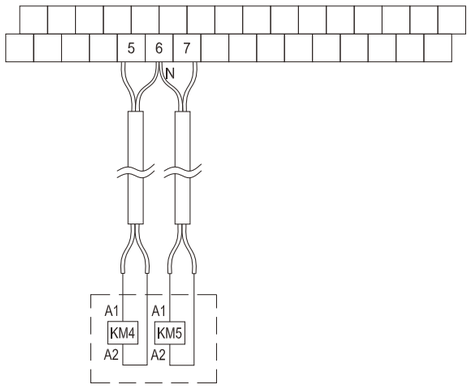

Voltage	220-240VAC
Maximum running current(A)	0.2
Wiring size(mm^2)	0.75

Zone1 pump:External circulation pump;
KM4: Zone1 pump AC Contactor4
KM5:DHW pipe pump AC Contactor5

4) For tank booster heater:

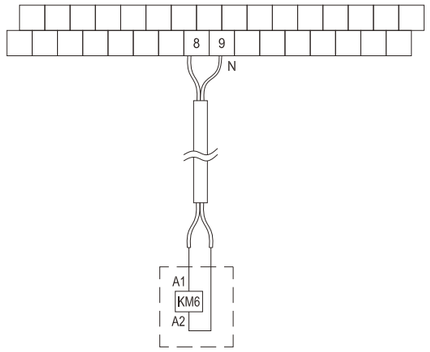

Voltage	220-240VAC
Maximum running current(A)	0.2
Wiring size(mm^2)	0.75

5) For zone2 pump and additional heat source control:

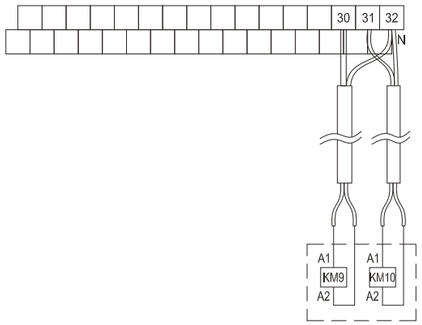

Voltage	220-240VAC
Maximum running current(A)	0.2
Wiring size(mm^2)	0.75
Control port signal type	Type 2

Zone2 pump：Mixing valve
KM9：Zone2 pump AC Contactor9
Additional heat source control：AHS
KM10：additional heat source control AC Contactor10

WARNING

This part only applies to Basic. For Customized, cause thereis an interval backup heater in the unit, the indoor unitshould not be connected to any additional heat source.

6)For smart grid：

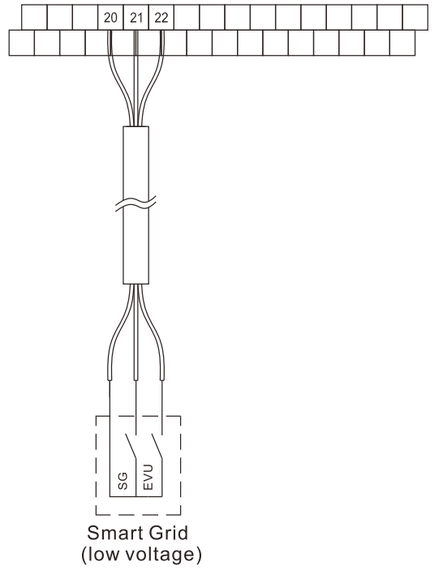

The unit has smart grid function, there are two ports on PCB to connect SG signal and EVU signal as following:
1.when EVU signal is on, the unit operate as below:
DHW mode turn on, the setting temperature will be changed to 70℃ automatically, and the TBH operate as below.T5<69. the TBH is on, T5≥70, the TBH is off. The unit operate in cooling/heating mode as the normal logic.
2. When EVU signal is off, and SG signal is on, the unit operate normally.
3 When EVU signal is off, SG signal is off, the DHW mode is off, and the TBH is invalid, disinfect function is invalid. The max running time for cooling/heating is “SG RUNNIN TIME”, then unit will be off.

7)For between outdoor and indoor：

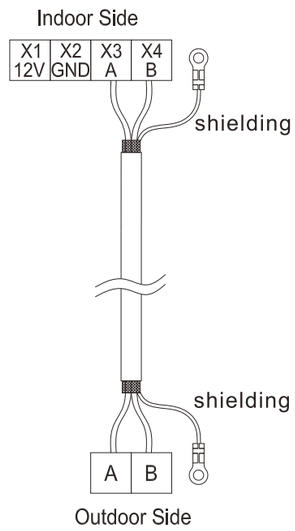

1. the communication line between the indoor unit and the outdoor unit must use shielded wire, and the shielded end is connected to the grounding hole of the electrical box of the indoor unit and the outdoor unit.

8)Room Thermostat(Low Voltage)

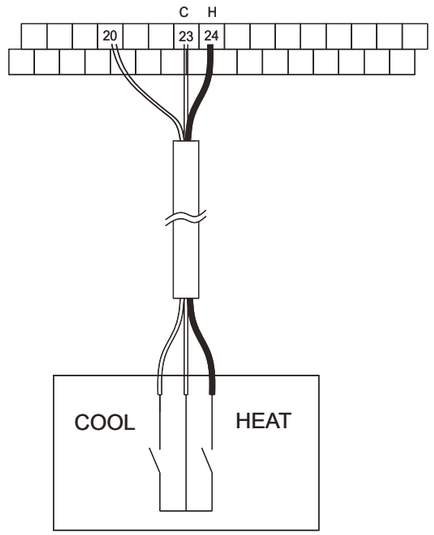

9)Room Thermostat(High Voltage)

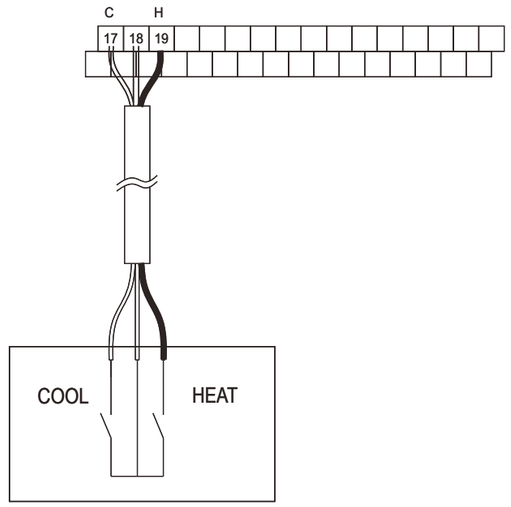

8.4 Refrigerant pipework

For all guidelines, instructions and specifications regarding refrigerant pipework between the indoor unit and outdoor unit, please refer to “Installation and owner's a-thermal split outdoor unit”.

CAUTION

When connecting the refrigerant pipes, always use two wrenches/spanners for tightening or loosening nuts! Failure to do so can result in damaged piping connections and leaks.

NOTE

- The appliance contains fluorinated greenhouse gases. Chemical name of the gas: R32
- Fluorinated greenhouse gases are contained in hermetically sealed equipment.
- An electrical switchgear has a tested leakage rate of less than 0.1 % per year as set out in the technical specification.

8.5 Water piping

All piping lengths and distances have been taken into consideration.

NOTE

- If no glycol is in the system, in case of a power supply failure or pump operating failure, drain all the water system if the water temperature is below 0'C in the cold winter (as suggested in the figure below figure 1).
- When water is at standstill inside the system, freezing is very likely to happen and damage the system in the process.

8.5.1 Check the water circuit

The unit is equipped with a water inlet and water outlet for connection to a water circuit. This circuit must be provided by a licensed technician and must comply with local laws and regulations.
The unit is only to be used in a closed water system. Application in an open water circuit can lead to excessive corrosion of the water piping.
Before continuing installation of the unit, check the following:

- The maximum water pressure ≤ 3 bar.
- The maximum water temperature ≤ 70℃ according to safety device setting.
- Always use materials that are compatible with the water used in the system and with the materials used in the unit.
- Ensure that components installed in the field piping can withstand the water pressure and temperature.
- Drain taps must be provided at all low points of the system to permit complete drainage of the circuit during maintenance.
- Air vents must be provided at all high, points of the system. The vents should be located at points that are easily accessible for service. An automatic air purge is provided inside the unit. Check that this air purge valve is not tightened so that automatic release of air in the water circuit is possible.

8.5.2 Water volume and sizing expansion vessels

The units are equipped with an expansion vessel of 8L that has a default pre-pressure of 1.5 bar. To assure proper operation of the unit, the pre-pressure of the expansion vessel might need to be adjusted.

1) Check that the total water volume in the installation, excluding the internal water volume of the unit, is at least 40L. See 13 “Technical specifications” to find the total internal water volume of the unit.

NOTE

- In most applications this minimum water volume will be satisfactory.
- In critical processes or in rooms with a high heat load though, extra water might be required.
- When circulation in each space heating loop is controlled by remotely controlled valves, it is important that this minimum water volume is kept even if all the valves are closed.

2) Expansion vessel volume must fit the total water system volume.
3) To size the expansion for the heating and cooling circuit.

The expansion vessel volume can follow the figure below figure 2 :

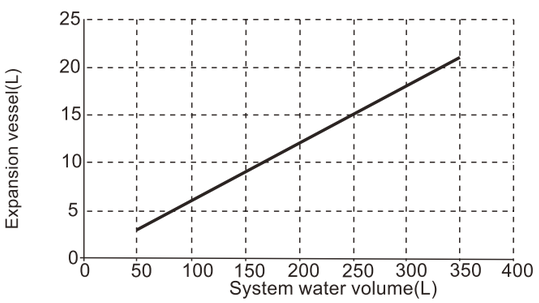

figure 1

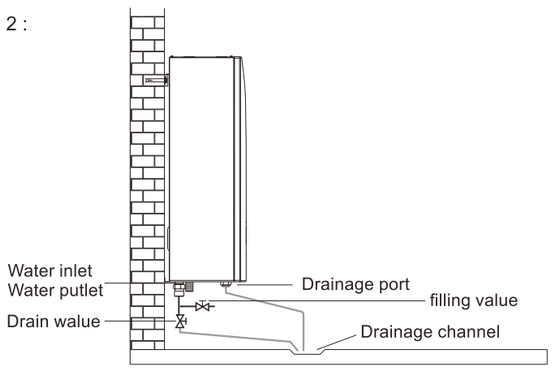

figure 2

8.5.3 Water circuit connection

Water connections must be made correctly in accordance with respect to the water inlet and water outlet.

CAUTION

Be careful not to deform the unit's piping by using excessive force when connecting the piping. Deforming the piping can cause the unit to malfunction.

If air, moisture or dust gets in the water circuit, problems may occur. Therefore, always take into account the following when connecting the water circuit:

- Use clean pipes only.
- Hold the pipe end downwards when removing burrs.
- Cover the pipe end when inserting it through a wall to prevent dust and dirt entering.
- Use a good thread sealant for sealing the connections. The sealing must be able to withstand the pressures and temperatures of the system.
- When using non-copper metallic piping, be sure to insulate two kind of materials from each other to prevent galvanic corrosion.
- As copper is a soft material, use appropriate tools for connecting the water circuit. Inappropriate tools will cause damage to the pipes.

NOTE

The unit is only to be used in a closed water system. Application in an open water circuit can lead to excessive corrosion of the water piping:

- Never use Zn-coated parts in the water circuit. Excessive corrosion of these parts may occur as copper piping is used in the unit's internal water circuit.
- When using a 3-way valve in the water circuit. Preferably choose a ball type 3-way valve to guarantee full separation between the domestic hot water and floor heating water circuit.
- When using a 3-way valve or a 2-way valve in the water circuit. The recommended maximum changeover time of the valve should be less than 10 seconds.

8.5.4 Water circuit anti-freeze protection

All internal hydronic parts are insulated to reduce heat loss. Insulation must also be added to the field piping.

The software contains special functions using the heat pump and backup heater (if it is aviliable) to protect the entire system against freezing. When the temperature of the water flow in the system drops to a certain value, the unit will heat the water, either using the heat pump, the electric heating tap, or the backup heater. The freeze protection function will turn off only when the temperature increases to a certain value.

In event of a power failure, the above features would not protect the unit from freezing.

CAUTION

When the unit is not running for a long time make sure the unit is powered on all the time. if you want to cut off the power, the water in the system pipe needs to be drained clean, avoid the pump and pipeline system be damaged by freezing. Also the power of the unit needs to be cut off after water in the system is drained clean.

Water may enter into the flow switch and cannot be drained out and may freeze when the temperature is low enough. The flow switch should be removed and dried, then can be reinstalled in the unit.

NOTE

1. Counterclockwise rotation, remove the flow switch.
2. Drying the flow switch completely.

8.6 Filling water

- Connect the water supply to the filling valves and open the valve.
- Make sure all the automatic air purge valves are open (at least 2 turns).
- Filling with water until the manometer indicates a pressure of approximately 2.0bar. Remove air in the circuit as much as possible using the automatic air purge valves.

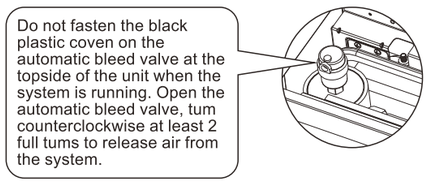

NOTE

During filling, it might not be possible to remove all air in the system. Remaining air will be removed through the automatic bleed valve during the first operating hours of the system. Topping up the water afterwards might be required.

- The water pressure indicated on the manometer will vary depending on the water temperature (higher pressure at higher water temperature). However, at all times water pressure should remain above 0.3bar to avoid air entering the circuit.
- The unit might drain-off too much water through the pressure relief valve.
- Water quality should be complied with EN 98/83 EC Directives.
- Detailed water quality condition can be found in EN 98/83 EC Directives.

8.7 Water piping insulation

The compete water circuit including all piping, water piping must be insulated to prevent condensation during cooling operation and reduction of the heating and cooling capacity as well as prevention of freezing of the outside water piping during winter. The insulation material should at least of B1 fire resistance rating and complies with all applicable legislation. The thickness of the sealing materials must be at least 13 mm with thermal conductivity 0.039 W/mK in order to prevent freezing on the outside water piping.

If the outdoor ambient temperature is higher than 30℃ and the humidity is higher than RH 80%, then the thickness of the sealing materials should be at least 20 mm in order to avoid condensation on the surface of the seal.

8.8 Field wiring

WARNING

A main switch or other means of disconnection, having a contact separation in all poles, must be incorporated in the fixed wiring in accordance with relevant local laws and regulations. Switch off the power supply before making any connections. Use only copper wires. Never squeeze bundled cables and make sure they do not come in contact with the piping and sharp edges. Make sure no external pressure is applied to the terminal connections. All field wiring and components must be installed by a licensed electrician and must comply with relevant local laws and regulations.

The field wiring must be carried out in accordance with the wiring diagram supplied with the unit and the instructions given below.

Be sure to use a dedicated power supply. Never use a power supply shared by another appliance.

Be sure to establish a ground. Do not ground the unit to a utility pipe, surge protector, or telephone ground. Incomplete grounding may cause electrical shock.

Be sure to install a ground fault circuit interrupter (30 mA). Failure to do so may cause electrical shock.

Be sure to install the required fuses or circuit breakers.

8.8.1 Precautions on electrical wiring work

- Fix cables so that cables do not make contact with the pipes (especially on the high pressure side).
- Fix the wire with cable ties so that it will not contact the pipe, especially on the high-voltage side.
- Make sure no external pressure is applied to the terminal connectors.
- When installing the ground fault circuit interrupter make sure that it is compatible with the inverter (resistant to high frequency electrical noise) to avoid unnecessary opening of the ground fault circuit interrupter.

NOTE:

The ground fault circuit interrupter must be a high- speed type breaker of 30 mA (< 0.1 s).
This unit is equipped with an inverter. Installing, a phase advancing capacitor not only will reduce the power factor improvement effect, but also may cause abnormal heating of the capacitor due to high-frequency waves. Never install a phase advancing capacitor as it could lead to an accident.

8.8.2 Wiring overview

Loads requiring field wiring. Refer also to “7 typical application”.

(a) Minimum cable section AWG18 (0.75 mm2).
(b)The thermistor cable are delivered with the unit: if the current of the load is large, an AC contactor is needed.

NOTE

Please use HO7RN-F for the power wire, all the cables are connect to high voltage except for thermistor cable and cable for user interface.

- Equipment must be grounded.
- All high-voltage external load, if it is metal or a grounded port, must be grounded.
- All external load current is needed less than 0.2A, if the single load current is greater than 0.2A, the load must be controlled through AC contactor.
- Plate heat exchanger E-Heating tape and Flow switch E-Heating tape share a control port.
  Field wiring guidelines.
- Most field wiring on the unit is to be made on the terminal block inside the switch box. To gain access to the terminal block, remove the switch box service panel.

WARNING

Switch off all power including the unit power supply and backup heater and domestic hot water tank power supply (if applicable) before removing the switch box service panel.

- Fix all cables using cable ties.
- A dedicated power circuit is required for the backup heater.
- Installations equipped with a domestic hot water tank (field supply) require a dedicated power circuit for the booster heater, Please refer to the domestic hot water tank Installation & Owner's Manual.
- Lay out the electrical wiring so that the front cover does not rise up when doing wiring work and attach the front cover securely.
- Follow the electric wiring diagram for electrical wiring works (the electric wiring diagrams are located on the rear side of door 2.
- Install the wires and fix the cover firmly so that the cover may be fit in properly.

8.8.3 Precautions on wiring of power supply

- Use a round crimp-style terminal for connection to the power supply terminal board. In case it cannot be used due to unavoidable reasons, be sure to observe the following instructions.
  - Do not connect different gauge wires to the same power supply terminal.(Loose connections may cause overheating.)
- Use the correct screwdriver to tighten the terminal screws. Small screwdrivers can damage the screw head and prevent appropriate tightening.
- Over-tightening the terminal screws can damage the screws.
- Attach a ground fault circuit interrupter and fuse to the power supply line.
- In wining, make certain that prescribed wires are used, carry out complete connections, and fix the wires so that outside force cannot affect the terminals.

8.8.4 Safety device requirements

1.Select the wire diameters (minimum value) individually for each unit based on the table below.
2.Select circuit breaker that having a contact separation in all poles not less than 3 mm providing full disconnection, where MFA is used to select the current circuit breakers and residual current operation breakers:

System	Power Current						IWPM	
	Hz	Voltage(V)	Min(V)	Max(V)	MCA(A)	MFA(A)	kW	FLA(A)
6kW(3kW heater)	50	220-240/1N	198	264	14.30	/	0.095	0.75
16kW(9kW heater)	50	380-415/3N	342	456	14.00	/	0.095	0.75
16kW(3kW heater)	50	220-240/1N	198	264	14.30	/	0.095	0.75

NOTE

MCA: Max. Circuit Amps.(A)
MFA: MAX. Fuse Amps.(A)
IWPM: Indoor water Pump Motor
FLA: Full Load Amps.(A)

- A creepage circuit breaker above the maxium current must be installed to avoid possible electric shocks.

9 Start-up And Configuration

The unit should be configured by the installer to match the installation environment (outdoor clirmate, installed options, etc.) and user expertise.

CAUTION

It is important that all information in this chapter is read sequentially by the installer and that the system is configured as applicable.

9.1 Initial start-up at low outdoor ambient temperature

During initial start-up and when water temperature is low, it is important that the water is heated gradually. Failure to do so may result in concrete floors cracking due to rapid temperature change. Please contact the responsible cast concrete building contractor for further details.
To do so, the lowest water flow set temperature can be decreased to a value between 25°C and 35°C by adjusting the FOSERVICEMAN. Refer to SPECIAL FUNCTION.

9.2 Pre-operation checks

Checks before initial start-up.

DANGER

switch of the power supply before making any connections.
After the installation of the unit, check the following before switching on the circuit breaker;

- Field wiring :Make sure that the field wiring between the local supply panel and unit and valves (when applicable),unit and room thermostat (when applicable), unit and domestic hot water tank, and unit and backup heater kit have been connected according to the instructions described in the chapter 8.8 “Field wiring”, according to the wiring diagrams and to local laws and regulations.
- Fuses, circuit breakers, or protection devices Check that the fuses or the locally installed protection devices are of the size and type specified in 13 “Technical specifications”. Make sure that no fuses or protection devices have been bypassed.
- Backup heater circuit breaker: Do not forget to turn on the backup heater circuit breaker in the switchbox (it depends on the backup heater type). Refer to the wiring diagram.
- Booster heater circuit breaker: Do not forget to turn on the booster heater circuit breaker (applies only to units with optional domestic hot water tank installed).
- Ground wiring: Make sure that the ground wires have been connected properly and that the ground terminals are tightened.
- Internal wiring: Visually check the switch box for loose connections or damaged electrical components.
- Mounting: Check that the unit is properly mounted, to avoid abnormal noises and vibrations when starting up the unit.
- Damaged equipment: Check the inside of the unit for damaged components or squeezed pipes.
- Refrigerant leak: Check the inside of the unit for refrigerant leakage. If there is a refrigerant leak, call your local dealer.
- Power supply voltage： Check the power supply voltage on the local supply panel. The voltage must correspond to the voltage on the identification label of the unit.
- Air purge valve: Make sure the air purge valve is open (at least 2 turns).
  Shut-off valves: Make sure that the shut-off valves are fully open.

10 Test Run And Final Checks

The installer is obliged to verify correct operation of unit after installation.

10.1 Final checks

Before switching on the unit, read following recommendations:
- When the complete installation and all necessary setting have been carried out, close all front panels of the unit and refit the unit cover.
- The service panel of the switch box may only be opened by a licensed electrician for maintenance purpose.

Note:
hat during the first running period of the unit, required power input may be higher than stated on the nameplate of the unit. This phenomenon originates from the compressor that needs elapse of a 50 hours run in period before reaching smooth operation and stable power consumption.

10.2 Test run operation (manually)

If required, the installer can perform a manual test run operation at any time to check correct operation of air purge, heating, cooling and domestic water heating.

11 Maintenance And Service

In order to ensure optimal availability of the unit, a number of checks and inspections on the unit and the filed wiring have to be carried out at regular intervals.
This maintenance needs to be carried out by your local technician.
In order to ensure optimal availability of the unit, a number of checks and inspections on the unit and the field wiring have to be carried out at regular intervals.
This maintenance has to be carried out by your local technician.

DANGER

Electric Shock
- Before carrying out any maintenance or repairing activity, must switch off the power supply on the supply panel.
- Do not touch any live part for 10 minutes after the power supply is turned off.
- The crank heater of compressor may operate even in standby.
- Please note that some sections of the electric component box are hot.
- Forbid touch any conductive parts.
- Forbid rinse the unit. It may cause electric shock or fire.

Forbid leave the unit unattended when service panel is removed.

The following checks must be performed at least once a year by qualified person:

- Water pressure
  Check the water pressure, if it is below 1 bar, fill water to the system.
- Water filter
  Clean the water filter.
- Water pressure relief valve
  Check for correct operation of the pressure relief valve by turning the black knob on the valve counter-clockwise:
  -If you do not hear a clacking sound, contact your dealer.
  -In case the water keeps running out of the unit, close both the water inlet and outlet shut-off valves first and then contact your local dealer.
- Pressure relief valve hose
  Check that the pressure relief valve hose is positioned appropriately to drain the water.
- Backup heater vessel insulation cover
  Check that the backup heater insulation cover is fastened tightly around the backup heater vessel.
- Domestic hot water tank pressure relief valve (filed supply)Applies only to installation with a domestic hot water tank
  Check for correct operation of the pressure relief valve on the domestic hot water tank.
- Domestic hot water tank booster heater
  Applies only to installations with a domestic hot water tank. It is advisable to remove lime buildup on the booster heater to extend its life span, especially in regions with hard water. To do so, drain the domestic hot water tank, remove the booster heater from the domestic hot water tank and immerse in a bucket(or similar)with lime-removing product for 24 hours.
- Unit switch box
  -Carry out a thorough visual inspection of the switch box and look for obvious defects such as loose connections or defective wiring.
  -Check for correct operation of contactors with an ohm meter, All contacts of these contactors must be in open position.
  Use of glycol(Refer to 8.5.4“Water circuit anti-freeze protection”)Document the glycol concentration and the pH-valve in the system at least once a year.
  -A PH-value below 8.0 indicates that a significant portion of the inhibitor has been depleted and that more inhibitor needs to be added.
  -When the PH-value is below 7.0 then oxidation of the glycol occurred, the system should be drained and flushed thoroughly before severe damage occurs.
  Make sure that the disposal of the glycol solution is done in accordance with relevant local laws and regulations.

12 Trouble Shooting

This section provides useful information for diagnosing and correcting certain troubles which may occur in the unit.
This troubleshooting and related corrective actions may only be carried out by your local technician.

12.1 General guidelines

Before starting the troubleshooting procedure, carry out a thorough visual inspection of the unit and look for obvious defects such as loose connections or defective wiring.

WARNING

- When carrying out an inspection on the switch box of the unit, always make sure that the main switch of the unit is switched off.
- When a safety device was activated, stop the unit and find out why the safety device was activated before resetting it. Under on circumstance can safety devices be bridged or changed to a valve other than the factory setting. If the cause of the problem cannot be found, call your local dealer.
- If the pressure relief valve is not working correctly and is to be replaced, always reconnect the flexible hose attached to the pressure relief valve to avoid dripping out of the unit!

Note:For problems related to the optional solar kit for domestic water heating, refer to the troubleshooting in the Installation and owner's manual for that kit.

12.2 General Symptoms

Symptom 1: The unit is turned on but the unit is not heating or cooling as expected

Possible Causes	Corrective Action
The temperature setting is not correct.	Check the parameters.Tao_HMAX,Tao_HMIN in heat mode. Tao_CMAX,Tao_CMIN in cool mode.Tao_DHWMAX, Tao_DHWMIN in DHW mode.
The water flow is too low.	● Check that all shut off valves of the water circuit are in the right osition. ● Check the water filter is plugged. ● Make sure there is no air in the water system . ● Check on the manometer that there is sufficient water pressure. The water pressure must be >1 bar(water is cold). ● Make sure that the expansion vessel is not too high for the pump.
The water volume in the installation is too low.	Make sure the water volume in the installation is above the minimum required value(refer to “8.5.2 Water volume and sizing expansion vessels”)

Symptom 2: The unit is turned on but the compressor is not starting(space heating or domestic water heating)

Possible Causes	Corrective Action
The unit maybe operate out of its operation range (the water temperature is too low).	In case of low water temperature, the system utilizes the backup heater to reach the minimum water temperature first(18℃). ● Check that the backup heater power supply is correct. ● Check that the backup heater thermal fuse is closed. ● Check that the backup heater thermal protector is not activated. ● Check that the backup heater thermal contactors are not broken.

Symptom 3: Pump is making noise(cavitation)

Possible Causes	Corrective Action
There is air in the system.	Purge air.
Water pressure at pump inlet is too low.	● Check on the manometer that there is sufficient water pressure. The water pressure must be >1bar(water is cold). ● Check that the manometer is not broken. ● Check that the expansion vessel is not broken. ● Check that the setting of the pre-pressure of the expansion vessel is correct (refer to “8.5.2 Water volume and seizing expansion vessels”).

Symptom 4: The water pressure relief valve opens

Possible Causes	Corrective Action
The expansion vessel is broken.	Replace the expansion vessel.
The filling water pressure in the installation is higher than 0.3MPa.	Make sure that the filling water pressure in the installation is about 0.1 ~ 0.2MPa(refer to “8.5.2 Water volume and sizing expansion vessels”).

Symptom 5: The water pressure relief valve leaks

Possible Causes	Corrective Action
Dirt is blocking the water pressure relief valve outlet.	Check for correct operation of the pressure relief valve by turning the red knob on the valve counter clockwise: ● If you do not hear a clacking sound, contact your local dealer. ● In case the water keeps running out of the unit, close both the water inlet and outlet shut-off valves first and then contact your local dealer.

Symptom 6: Space heating capacity shortage at low outdoor temperatures

Possible Causes	Corrective Action
Backup heater operation is not activated.	Check that the “OTHER HEATING SOURCE/BACKUP HEATER” is enable, see “ **Wired Controller Instruction**” Check whether or not the thermal protector of the backup heater has been activated(refer to “Controls parts for backup heater(IBH)”). Check if booster heater is running, the backup heater and booster heater can't operate simultaneously.
Too much heat pump capacity is used for heating domestic hot water (applies only to installations with a domestic hot water tank).	Check that the “t_DHWHP_MAX” and“t_DHWHP_RESTRICT”are configured appropriately: ● Make sure that the “DHW PRIORITY” in the user interface is disabled. ● Enable the “Tao_TBH_ON” in the user interface/FOR SERVICEMAN to

Symptom 7: Heat mode can't change to DHW mode immediately

Possible Causes	Corrective Action
There is air in the system.	Purge air.
Volume of tank is too small and the location of water temperature probe not high enough	● Set “t-DHWHP_RESTRICT” to minimum value. ● Enable TBH, and TBH should be controlled by the outdoor unit. ● If AHS is available, turn on first, if requirement for turn heat pump on is fulfilled, the heat pump will turn on. ● If both TBH and AHS are not available, try to change the position of TWT probe(refer to 5 “General introduction”).

Symptom 8:DHW mode can't change to Heat mode immediately.

Possible Causes	Corrective Action
Heat exchange for space heating not big enough	● Set “t_DHWHP_MAX”to minimum value, the suggested value is 60min. ● If circulating pump out of unit is not controlled by unit, try to connect it to the unit. ● Add3-way valve at the inlet of fan coil to ensure enough water flow.
Space heating load is small	Normal, no need for heating
Disinfect function is enabled but without TBH	● Disable disinfect function ● Add TBH or AHS for DHW mode
Manual turn on the FAST WATER function, after the hot water meets the requirements, the heat pump fails to switch to the air-conditioning mode in time when the air conditioner is in demand	Manual turn off the FAST WATER Add TBH or AHS for DHW mode
When the ambient temperature is low, the hot water is not enough and the AHS is not operated or operated late	● Set “Tao_DHWMIN”,the suggested value is ≥-5℃ ● Set “Tao_TBH_ON”,the suggested value is ≥5℃
DHW mode priority	If there is AHS or IBH connect to the unit ,when the outdoor unit failed , the indoor unit must run DHW mode till the water temperature reach the setting temperature before change to heating mode.

Symptom 9：DHW mode heat pump stop work but setpoint not reached, space heating require heat but unit stay in DHW mode

Possible Causes	Corrective Action
Surface of coil in the tank not large enough	The same solution for Symptom 7
TBH or AHS not available	Heat pump will stay in DHW mode until “t_DHWHP_MAX” reached or setpoint. Add TBH or AHS for DHW mode, TBH and AHS should be controlled by the unit

12.3 Error codes

When a safety device is activated, an error code will be displayed on the user interface.
A list of all errors and corrective actions can be found in the table below.
Reset the safety by turning the unit OFF and back ON.
In case this procedure for resetting the safety is not successful, contact your local dealer.

ERROR CODE	MALFUNCTION OR PROTECTION	FAILURE CAUSE AND CORRECTIVE ACTION
A7	Water flow falut	1.The wire circuit is short connected or open. Reconnect the Wire correctly. 2.Water flow rate is too low. 3. Water flow switch is failed, switch is open or close continuously, change the water flow switch.
AA	Communication fault between controller and indoor unit	1.Wire doesn't connect between wired controller and unit. connect the wire. 2.Communication wire sequence is not right. Reconnect the Communication fault wire in the right sequence. between controller. 3.Whether there is a high magnetic field or high power and indoor unit interfere, such as lifts, large power transformers, etc.. To add a barrier to protect the unit or to move the unit to the other place.
93	Final outlet water temp.sensor(TWO2) fault	1.Check the resistance of the sensor. 2.The TWO2 sensor connector is loosen. Reconnect it. 3.The TWO2 sensor connector is wet or there is water in. remove the water, make the connector dry. Add waterproof adhesive. 4.The TWO2 sensor failure, change a new sensor.
96	Water tank temp. sensor(TWT)fault	1.Check the resistance of the sensor. 2.The TWTsensor connector is loosen. Reconnect it. 3.The TWT sensor connector is wet or there is water in. remove the water, make the connector dry. Add waterproof adhesive 4.The TWT sensor failure, change a new sensor.
94	Inlet water temp. sensor(TWI)malfunction	1. Check the resistance of the sensor. 2. The TWI sensor connector is loosen. Re connect it. Inlet water temp.sensor 3.The TWI sensor connector is wet or there is water in. (TWI) malfunction remove the water, make the connector dry. Add waterproof adhesive 4. The TWI sensor failure, change a new sensor.
A9	Communication fault between indoor unit and outdoor unit	1.wire doesn't connect between outdoor unit and main controll board of indoor unit. connect the wire. 2.Communication wire sequence is not right. Reconnect the wire in the right sequence. 3. Whether there is a high magnetic field or high power interfere, such as lifts, large power transformers, etc.. To add a barrier to protect the unit or to move the unit to the other place.
A3	Refrigerant liquid temp.sensor(TICI) fault	1.Check the resistance of the sensor. 2.The TICI sensor connector is loosen. Re connect it. 3.The TICI sensor connector is wet or there is water in. remove the water, make the connector dry. Add waterproof adhesive 4. The TICI sensor failure, change a new sensor.
A4	Refrigerant gas temp.sensor(TICO) fault	1.Check the resistance of the sensor. 2. The TICO sensor connector is loosen. Reconnect it. 3.The TICO sensor connector is wet or there is water in. remove the water, make the connector dry. Add waterproof adhesive. 4. The TICO sensor failure, change a new sensor.
95	Outlet water temp.sensor(TWO1) fault	1. The TWO1 sensor connector is loosen. Reconnect it. 2.The TWO1 sensor connector is wet or there is water in. remove the water, make the connector dry. add waterproof adhesive. 3. The TWO1 sensor failure, change a new sensor.
7F	Solar temp.sensor(Tsolar) fault	1.Check the resistance of the sensor. 2.The Tsolar sensor connector is loosen, reconnect it. 3.The Tsolar sensor connector is wet or there is water in, remove the water ,make the connector dry. Add waterproof adhesive. 4.The Tsolar sensor failure,change a new sensor.

ERROR CODE	MALFUNCTION OR PROTECTION	FAILURE CAUSE AND CORRECTIVE ACTION
7E	Floor heating water inlet temp. sensor (TWI_FLH)	1.Check the resistance of the sensor. 2.The TWI_FLH sensor connector is loosen, reconnect it. 3.The TWI_FLH sensor connector is wet or there is water in, remove the water ,make the connector dry. Add waterproof adhesive. 4.The TWI_FLH sensor failure, change a new sensor.
A5	IDU water pump fault	1.Check whether the water valve is open 2.Check whether the water pump control line is loose 3.Check whether the filter is dirty and blocked 4. Check whether the pump voltage is lower than 170V or higher than 270V 5.The water pump failure, change a new water pump
98	Early closing fault of water flow switch	1. Check whether the wiring of water flow switch is correct 2. Check whether other equipment is connected in series with the host 3. Water flow switch failure， change a new water flow switch
97	Anti-freezing Low Pressure Switch (AFLP) protection	1. Check whether AFLP is loose 2. Check whether there is insufficient refrigerant 3. Check whether the filter is dirty and blocked 4. The AFLP failure,change a new AFLP
AF	Electric heating overheat protection	1. Check whether the filter is dirty and blocked 2.Check whether the thermal protection switch falls off
7D	Expansion Board Comm fault.	Check whether the connection line is normal
A8	EE fault	1.check whether the internal and external connecting lines are connected normally 2.The control panel failure,change a new control panel

CAUTION

In winter, if the unit has failure and the unit is not repaired in time, the water pump and pipeline system may be damaged by freezing, so failure must be repaired in time.

13 Technical Specifications

Indoor unit model	6kW(3kW Heater)	16kW(9kW Heater)	16kW(3KW Heater)
Power supply	220-240V~50Hz	380-415V 3N~ 50Hz	220-240V~50Hz
Rated input	3095W	9095W	3095W
Rated Current	13.5A	13.3A	13.5A
Nominal capacity	Refer to the technical data		
Dimensions (WxHxD) (mm)	420x790x270		
Packing (WxHxD) (mm)	515x1045x350		
Heat exchanger	Plate heat exchanger		
Electric heater	3000W	9000W	3000W
Internal water volume	5.0L		
Rated water pressure	0.3MPa		
Filter mesh	60		
Min. water flow (flow switch)	6L/min	10L/min	10L/min
Pump			
Type	Dc inverter		
Max. head	9m		
Power input	4~95W		
Expanssion vessel			
Volume	8L		
Max. operating pressure	0.3MPa(g)		
Pre-charge pressure	0.10MPa(g)		
Weight			
Net weight	38kg	39kg	38kg
Gross weight	44kg	45kg	43kg
Connections			
Refrigerant gas/liquid side	Φ15.9/Φ9.52	Φ15.9/Φ9.52	Φ15.9/Φ9.52
Water inlet/outlet	R1"		
Drain connection	Φ25		
Operation range			
Outlet water(heating model)	+25~+65℃		
Outlet water(cooling model)	+5~+25℃		
Domestic hot water	+25~+60℃		
Water pressure	0.1 ~ 0.3MPa		

14 Maintenance Notice

Attention:
For maintenance or scrap, please contact authorized service centers.
Maintenance by unqualified person may cause dangers.
Feed air conditioner with R32 refrigerant, and maintain the air conditioner in strictly accordance with manufacturer's requirements. The chapter is mainly focused on special maintenance requirements for appliance with R32 refrigerant.
Ask repairer to read after-sales technical service handbook for detailed information.

Qualification requirements of maintenance personnel

1.Special training additional to usual refrigerating equipment repair procedures is required when equipment with flammable refrigerants is affected.In many countries, this training is carried out by national training organisations that are accredited to teach the relevant national competency standards that may be set in legislation.The achieved competence should be documented by a certificate.
2.The maintenance and repair of the air conditioner must be conducted according to the method recommended by the manufacturer. If other professionals are needed to help maintain and repair the equipment, it should be conducted under the supervision of individuals who have the qualification to repair AC equipped with flammable refrigerant.

Inspection of the Site

- Safety inspection must be taken before maintaining equipment with R32 refrigerant to make sure the risk of fire is minimized.Check whether the place is well ventilated, whether anti-static and fire prevention equipment is perfect.
- While maintaining the refrigeration system, observe the following precautions before operating the system.

Operating Procedures

1.General work area:
All maintenance staff and others working in the local area shall be instructed on the nature of work being carried out. Work in confined spaces shall be avoided. The area around the workspace shall be sectioned off. Ensure that the conditions within the area have been made safe by control of flammable material.
2.Checking for presence of refrigerant:
The area shall be checked with an appropriate refrigerant detector prior to and during work, to ensure the technician is aware of potentially toxic or flammable atmospheres. Ensure that the leak detection equipment being used is suitable for use with all applicable refrigerants, i.e.no-sparking, adequately sealed or intrinsically safe.
3.Presence of fire extinguisher:
If any hot work is to be conducted on the refrigeration equipment or any associated parts, appropriate fire extinguishing equipment shall be available to hand. Have a dry powder or CO_2 fire extinguisher adjacent to the charging area.
4.No ignition sources:
No person carrying out work in relation to a refrigeration system which involves exposing any pipe work shall use any sources of ignition in such a manner that it may lead to the risk of fire or explosion. All possible ignition sources, including cigarette smoking, should be kept sufficiently far away from the site of installation, repairing, removing and disposal, during which refrigerant can possibly be released to the surrounding space. Prior to work taking place, the area around the equipment is to be surveyed to make sure that there are no flammable hazards or ignition risks.No Smoking' signs shallbe displayed.
5.Ventilated Area(open the door and window):
Ensure that the area is in the open or that it is adequately ventilated before breaking into the system or conducting any hot work. A degree of ventilation shall continue during the period that the work is carried out. The ventilation should safely disperse any released refrigerant and preferably expel it externally into the atmosphere.
6.Checks to the refrigeration equipment:
Where electrical components are being changed, they shall be fit for the purpose and to the correct specification.
At all times the manufacturer's maintenance and service guidelines shall be followed. If in doubt, consult the manufacturer's technical department for assistance. The following checks shall be applied to installations using flammable refrigerants:
- The charge size is in accordance with the room size within which the refrigerant containing parts are installed.
- The ventilation machinery and outlets are operating adequately and are not obstructed.
- If an indirect refrigerating circuit is being used, the secondary circuit shall be checked for the presence of refrigerant.
- Refrigeration pipe or components are installed in a position where they are unlikely to be exposed to any substance which may corrode refrigerant containing components, unless the components are constructed of materials which are inherently resistant to being corroded or are suitably protected against being so corroded.

7.Checks to electrical devices:
Repair and maintenance to electrical components shall include initial safety checks and component inspection procedures If a fault exists that could compromise safety, then no electrical supply shall be connected to the circuit until it is satisfactorily dealt with. If the fault cannot be corrected immediately but it is necessary to continue operation, an adequate temporary solution shall be used. This shall be reported to the owner of the equipment so all parties are advised.
Initial safety checks shall include:
- That capacitors are discharged: this shall be done in a safe manner to avoid possibility of sparking.
- That no live electrical components and wiring are exposed while charging, recovering or purging the system.
- Keep continuity of earthing.

Inspection of Cable

Check the cable for wear, corrosion, overvoltage, vibration and check if there are sharp edges and other adverse effects in the surrounding environment. During the inspection, the impact of aging or the continuous vibration of the compressor and the fan on it should be taken into consideration.

Leakage check of R32 refrigerant

Note: Check the leakage of the refrigerant in an environment where there is no potential ignition source. No halogen probe (or any other detector that uses an open flame) should be used.
Leak detection method:
For systems with refrigerant R32, electronic leak detection instrument is available to detect and leak detection should not be conducted in environment with refrigerant. Make sure the leak detector will not become a potential source of ignition, and is applicable to the measured refrigerant. Leak detector shall be set for the minimum ignitable fuel concentration (percentage) of the refrigerant. Calibrate and adjust to proper gas concentration (no more than 25%) with the used refrigerant.
The fluid used in leak detection is applicable to most refrigerants. But do not use chloride solvents to prevent the reaction between chlorine and refrigerants and the corrosion of copper pipeline.
If you suspect a leak, then remove all the fire from the scene or put out the fire.
If the location of the leak needs to be welded, then all refrigerants need to be recovered, or isolate all refrigerants away from the leak site (using cut-off valve). Before and duringthe welding, use OFN to purify the entire system.

Removal and Vacuum Pumping

1.Make sure there is no ignited fire source near the outlet of the vacuum pump and the ventilation is well.
2.Allow the maintenance and other operations of the refrigeration circuit should be carried out according to the general procedure, but the following best operations that the flammability is already taken into consideration are the key.
You should follow the following procedures:
● Remove the refrigerant.
● Decontaminate the pipeline by inert gases.
● Evacuation.
● Decontaminate the pipeline by inert gases again.
● Cut or weld the pipeline.
3.The refrigerant should be returned to the appropriate storage tank. The system should be blown with oxygen free nitrogen to ensure safety. This process may need to be repeated for several times. This operation shall not be carried out using compressed air or oxygen.
4.Through blowing process, the system is charged into the anaerobic nitrogen to reach the working pressure under the vacuum state, then the oxygen free nitrogen is emitted to the atmosphere, and in the end, vacuum the system.
Repeat this process until all refrigerants in the system is cleared. After the final charging of the anaerobic nitrogen, discharge the gas into the atmosphere pressure, and then the system can be welded. This operation is necessary for welding the pipeline.

Procedures of Charging Refrigerants

As a supplement to the general procedure, the following requirements need to be added:
- Make sure that there is no contamination among different refrigerants when using a refrigerant charging device.
The pipeline for charging refrigerants should be as short as possible to reduce the residual of refrigerants in it.
- Storage tanks should remain vertically up.
- Make sure the grounding solutions are already taken before the refrigeration system is charged with refrigerants.
- After finishing the charging (or when it is not yet finished), label the mark on the system.
- Be careful not to overcharge refrigerants.

Scrap and Recovery

Scrap:

Before this procedure, the technical personnel shall be thoroughly familiar with the equipment and all its features, and make a recommended practice for refrigerant safe recovery. For recycling the refrigerant, shall analyze the refrigerant and oil samples before operation. Ensure the required power before the test.
1.Be familiar with the equipment and operation.
2.Disconnect power supply.
3.Before carrying out this process, you have to make sure:
●If necessary, mechanical equipment operation should facilitate the operation of the refrigerant tank.
●All personal protective equipment is effective and can be used correctly.
●The whole recovery process should be carried out under the guidance of qualified personnel.
●The recovering of equipment and storage tank should comply with the relevant national standards.
4.If possible, the refrigerating system should be vacuumized.
5.If the vacuum state can't be reached, you should extract the refrigerant in each part of the system from many places.
6.Before the start of the recovery, you should ensure that the capacity of the storage tank is sufficient.
7.Start and operate the recovery equipment according to the manufacturer's instructions.
8.Don't fill the tank to its full capacity (the liquid injection volume does not exceed 80% of the tank volume).
9.Even the duration is short, it must not exceed the maximum working pressure of the tank.
10.After the completion of the tank filling and the end of the operation process, you should make sure that the tanks and equipment should be removed quickly and all closing valves in the equipment are closed.
11.The recovered refrigerants are not allowed to be injected into another system before being purified and tested.
Note: The identification should be made after the appliance is scrapped and refrigerants are evacuated. The identification should contain the date and endorsement. Make sure the identification on the appliance can reflect the flammable refrigerants contained in this appliance.

Recovery:

1.The clearance of refrigerants in the system is required when repairing or scrapping the appliance. It is recommended to completely remove the refrigerant.
2.Only a special refrigerant tank can be used when loading the refrigerant into the storage tank. Make sure the capacity of the tank is appropriate to the refrigerant injection quantity in the entire system. All tanks intended to be used for the recovery of refrigerants should have a refrigerant identification (i.e.refrigerant recovery tank).
Storage tanks should be equipped with pressure relief valves and globe valves and they should be in a good condition.
If possible, empty tanks should be evacuated and maintained at room temperature before use.
3.The recovery equipment should be kept in a good working condition and equipped with equipment operating instructions for easy access. The equipment should be suitable for the recovery of R32 refrigerants. Besides, there should be a qualified weighting apparatus which can be normally used. The hose should be linked with detachable connection joint of zero leakage rate and be kept in a good condition.
Before using the recovery equipment, check if it is in a good condition and if it gets perfect maintenance. Check if ll electrical components are sealed to prevent the leakage of the refrigerant and the fire caused by it. If you have any question, please consult the manufacturer.
4.The recovered refrigerant shall be loaded in the appropriate storage tanks, attached with a transporting instruction, and returned to the refrigerant manufacturer. Don't mix refrigerant in recovery equipment, especially a storage tank.
5.The space loading R32 refrigeration can't be enclosed in the process of transportation.
Take anti electrostatic measures if necessary in transportation. In the process of transport, loading and unloading, necessary protective measures must be taken to protect the air conditioner to ensure that the air conditioner is not damaged.
6.When removing the compressor or clearing the compressor oil, make sure the compressor is pumped to an appropriate level to ensure that there is no residual R32 refrigerants in the lubricating oil. The vacuum pumping should be carried out before the compressor is returned to the supplier. Only the electrical heating method for heating the compressor housing is allowed to speed up the process.
Ensure the safety when discharging oil from the system.

DE-COMMISSIONING, DISMANTLING & DISPOSAL

This product contains refrigerant under pressure, rotating parts, and electrical connections which may be a danger & cause injur
All work must only be carried out by competent persons using suitable protective clothing and safety precautions.

Read the Manual

Risk of Electric Shock

Unit is Remotely controlled
& may start without warning

1. Isolate all sources of electrical supply to the unit including any control system supplies switched by the unit. Ensure that all points of electrical and gas isolation are secured in the OFF position. The supply cables and gas pipe work may then be disconnected and removed. For points of connection refer to unit installation instructions.
2. Remove all refrigerant from each system of the unit into a suitable container using a refrigerant reclaim or recovery unit. This refrigerant may then be reused, if appropriate, or returned to the manufacturer for disposal. Under NO circumstances should refrigerant be vented to atmosphereWhere appropriate, drain the refrigerant oil from each system into a suitable container and dispose of according to local laws and regulations governing disposal of oily wastes.
3. Packaged units can generally be removed in one piece after disconnection as above. Any fixing down bolts should be removed and then unit lifted from position using the points provided and equipment of adequate lifting capacity. Reference MUST be made to the unit installation instructions for unit weight and correct methods of lifting. Note that any residual or spilt refrigerant oil should be mopped up and disposed of as described above.
4. After removal from position the unit parts may be disposed of according to local laws and regulations.
5.Meaning of crossed Out wheeled dustbin: Do not dispose of electrical appliances as unsorted municipal waste, use separate collection facilities. Contact your local government for information regarding the collection systems available. If electrical appliances are disposed of in landfills or dumps, hazardous substances can leak into the groundwater and get into the food chain, damaging your health and well being. When replacing old appliances with new ones, the retailer is legally obligated to take back your old appliance for disposals at least free of charge.

SEVRA
Innovative Climate Solutions

The exclusive importer of the SEVRA brand in Poland:
WIENKRA Sp. z o. o.

www.wienkra.pl www.sevra.pl

Kraków:
ul. Kotlarska 34, 31-539 Kraków
ul. Rzemieślnicza 20G, 30-347 Kraków
wienkra@wienkra.pl

Warszawa - Janki:
ul. Sokołowska 15, 05-090 Warszawa
wienkra-waw@wienkra.pl

Wrocław:
Al. Armii Krajowej 61, 50-541 Wrocław
wienkra-wro@wienkra.pl